HTH260 Attachment

waratah om
FORESTRY ATTACHMENTS

PARTS CATALOG

HTH260 Attachment

PC9307 (Jun-05)

Worldwide Construction and Forestry Division
worldwide
Litho in U.S.A. (Revised)

INTRODUCTION AND CUSTOMER INFORMATION

WJTF3215 -UN-22JUN04

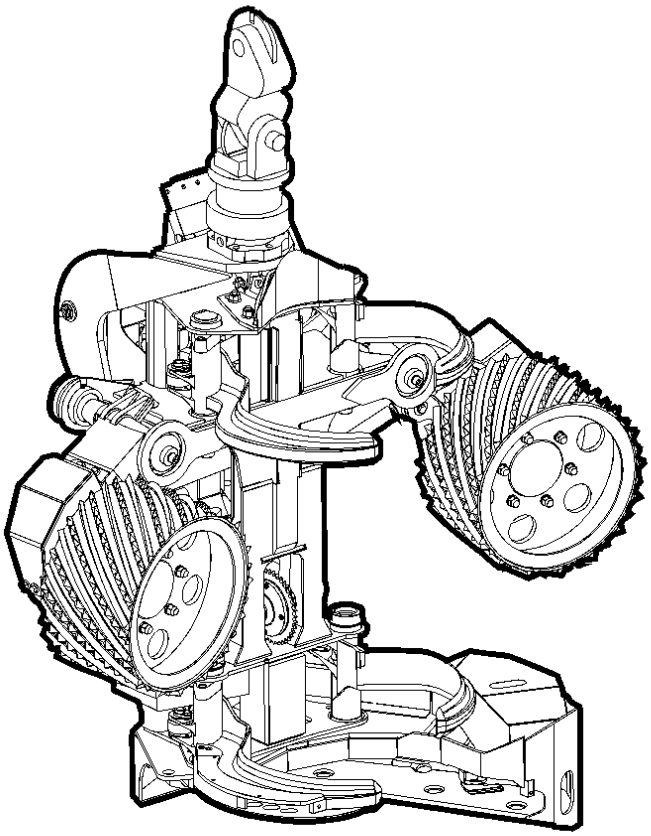

WJTF3215

FRONT VIEW OF THE WARATAH HTH260 ATTACHMENT
(MANUFACTURED 2002-)

TO THE CUSTOMER

THE PART NUMBERS IN THIS PARTS CATALOG WERE CORRECT AT THE TIME YOUR CATALOG WAS PUBLISHED. IT IS OUR POLICY TO CONSTANTLY IMPROVE OUR MACHINES AND, THEREFORE, PART NUMBERS MAY CHANGE. WHEN ORDERING PARTS, VERIFY PART NUMBERS THROUGH YOUR DEALER'S.

(SPECIFICATIONS AND DESIGN SUBJECT TO CHANGE WITHOUT NOTICE.)

COPYRIGHT © 2005 DEERE & COMPANY Moline, Illinois All rights reserved

SERIAL NUMBER LISTING INFORMATION

SERIAL NUMBER INFORMATION IS LISTED TO SHOW ON WHICH MACHINES EACH PART CAN BE USED; FOR EXAMPLE:

- THE PART CAN BE USED ON ALL MACHINES.

000000- THE PART CAN BE USED ON ALL MACHINES BEGINNING WITH THE SERIAL NUMBER LISTED.

-000000 THE PART CAN BE USED ON ALL MACHINES UP TO AND INCLUDING THE SERIAL NUMBER LISTED.

000000-000000 THE PART CAN BE USED ON ALL MACHINES BETWEEN AND INCLUDING THE SERIAL NUMBERS LISTED.

WHEN XXXXXX'S ARE LISTED IN PLACE OF A SERIAL NUMBER, A SERIAL NUMBER CHANGE WAS MADE BUT THE EXACT SERIAL NUMBER WAS NOT AVAILABLE WHEN THE CATALOG WAS PRODUCED.

WJTF3354 -UN-14APR05

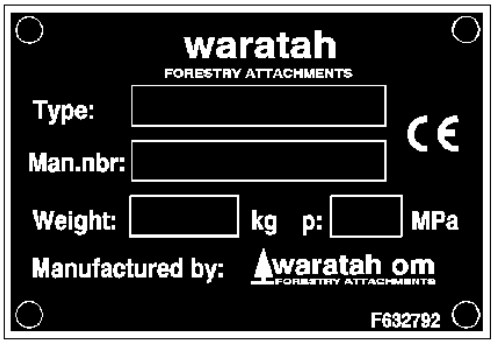

WJTF3354

ALPHABETICAL INDEX

GRID		PAGE
	A	
E15	ARM BLOCK,CONTROL VALVE	4462 - 12
C3	ARM,FEED WHEEL	4450 - 2
B5	ARM,HARVESTER HEAD	4440 - 14
A10	ARM,MEASURING WHEEL	4440 - 2
B1	AUTOMATIC SAW CHAIN TIGHTENER KIT	4440 - 10
A22	AUTOMATIC SAW CHAIN TIGHTENER, UREA	4440 - 9A
	B	
E21	BLOCK, VALVE, CHAIN TIGHTENER	4462 - 18
C15	BLOCK,SAW VALVE	4460 - 12
A20	BRACKET,CUTTING SAW CHAIN TIGHTENER	4440 - 8
C23	BRACKET,HARVESTER HEAD VALVE	4460 - 18
	C	
D11	CABLE FOR LENGHT MEASURING FOR FEED WHEEL, OPTIO, EUCALYPTUS	4460 - 29A
C11	CAP,PAINT MARKER RESERVOIR	4460 - 8
B9	CHAIN BRAKE COVER	4440 - 17A
E21	CHAIN TIGHTENER VALVE BLOCK	4462 - 18
A18	CHAIN,CUTTING SAW	4440 - 6
E15	CONTROL VALVE ARM BLOCK	4462 - 12
D13	CONTROL VALVE CONTROLLER MOUNTING PLATE	4460 - 30
E13	CONTROL VALVE CUTTING DEVISE BLOCK	4462 - 10
E7	CONTROL VALVE CUTTING SAW BLOCK	4462 - 4
E9	CONTROL VALVE FEED WHEEL BLOCK	4462 - 6
E11	CONTROL VALVE ROTATOR BLOCK	4462 - 8
E17	CONTROL VALVE TILT BLOCK	4462 - 14
D7	CONTROL VALVE WIRE LEAD JUNCTION BLOCK	4460 - 26
D7	CONTROL VALVE WIRE LEADS	4460 - 26
E5	CONTROL VALVE,HYDRAULIC SYSTEM	4462 - 2
C13	CONTROL VALVE,PAINT MARKER SYSTEM	4460 - 10
A16	CUTTING BAR,SAW	4440 - 4
E13	CUTTING DEVISE BLOCK, CONTROL VALVE	4462 - 10
F11	CUTTING KNIFE CYLINDER	4465 - 14
F13	CUTTING KNIFE CYLINDER	4465 - 16
F11	CUTTING KNIFE CYLINDER SEAL KIT	4465 - 14
F13	CUTTING KNIFE CYLINDER SEAL KIT	4465 - 16
B3	CUTTING SAW ANGLE INDICATOR	4440 - 12
E7	CUTTING SAW BLOCK CONTROL VALVE	4462 - 4
A18	CUTTING SAW CHAIN	4440 - 6
A20	CUTTING SAW CHAIN TIGHTENER BRACKET	4440 - 8
A20	CUTTING SAW CHAIN TIGHTENER CYLINDER	4440 - 8
C17	CUTTING SAW HYD.HOSES	4460 - 14
C5	CUTTING SAW HYDRAULIC DRIVE MOTOR	4460 - 2
A18	CUTTING SAW HYDRAULIC MOTOR	4440 - 6
A18	CUTTING SAW HYDRAULIC DRIVE MOTOR HYDRAULIC HOSES	4440 - 6
D3	CUTTING SAW LUBRICATION HOSES	4460 - 22
C9	CUTTING SAW OIL PUMP	4460 - 6
C9	CUTTING SAW OIL PUMP REPAIR KIT	4460 - 6
F11	CYLINDER,CUTTING KNIFE	4465 - 14
F13	CYLINDER,CUTTING KNIFE	4465 - 16
A20	CYLINDER,CUTTING SAW CHAIN TIGHTENER	4440 - 8
F7	CYLINDER,FEED ROLLS	4465 - 10
F9	CYLINDER,FEED ROLLS	4465 - 12
F15	CYLINDER,MEASURING ROLL	4465 - 18
F17	CYLINDER,MEASURING ROLL	4465 - 20
A10	CYLINDER,MEASURING WHEEL	4440 - 2
F3	CYLINDER,SAW	4465 - 6
F5	CYLINDER,SAW	4465 - 8
A16	CYLINDER,SAW TRANSMISSION	4440 - 4
E23	CYLINDER,TILT	4465 - 2
F1	CYLINDER,TILT	4465 - 4
	D	
B11	DECALS,HARVESTER HEAD	4440 - 18
B21	DOUBLE DAMP LINK, 80/100 MM, OPTION	4443 - 8
B19	DOUBLE DAMP LINK, 100/100 MM, OPTION	4443 - 6
D5	DROPPEN CHAIN LUBRICATION SYSTEM, OPTION	4460 - 24
	E	
D15	ELECTRICAL BOX MOUNTING, TM 10, BRACKET	4460 - 32
D21	ELECTRICAL SYSTEM TM10 3G+	4460 - 38
D23	ELECTRICAL SYSTEM TM10 3G+	4460 - 40
E1	ELECTRICAL SYSTEM TM10 3G+	4460 - 42
E3	ELECTRICAL SYSTEM TM10 3G+	4460 - 44
D17	ELECTRICAL SYSTEM, TM 10	4460 - 34
D19	ELECTRICAL SYSTEMS, SENSORS, TM 10	4460 - 36
	F	
C7	FEED ROLL HYDRAULIC DRIVE MOTOR	4460 - 4
C7	FEED ROLL HYRAULIC DRIVE MOTOR REPAIR KIT	4460 - 4
F7	FEED ROLLS CYLINDER	4465 - 10
F9	FEED ROLLS CYLINDER	4465 - 12
F7	FEED ROLLS CYLINDER SEAL KIT	4465 - 10
F9	FEED ROLLS CYLINDER SEAL KIT	4465 - 12
C3	FEED WHEEL	4450 - 2
C3	FEED WHEEL ARM	4450 - 2
E9	FEED WHEEL BLOCK, CONTROL VALVE	4462 - 6
C3	FEED WHEEL HYDRAULIC DRIVE MOTOR	4450 - 2
C19	FLUSHING HOSE FOR SAW MOTOR	4460 - 15A
B5	FRAME,HARVESTER HEAD	4440 - 14
	H	
A10	HARVESTER HEAD	4440 - 2
B7	HARVESTER HEAD	4440 - 16

ALPHABETICAL INDEX - CONTINUED

GRID		PAGE
B5	HARVESTER HEAD ARM	4440 - 14
B11	HARVESTER HEAD DECALS	4440 - 18
D1	HARVESTER HEAD FEED WHEEL HYDRAULIC HOSES	4460 - 20
B5	HARVESTER HEAD FRAME	4440 - 14
C23	HARVESTER HEAD HYD.HOSES	4460 - 18
C21	HARVESTER HEAD HYDRAULIC HOSES	4460 - 16
D9	HARVESTER HEAD HYDRAULIC HOSES	4460 - 28
B5	HARVESTER HEAD KNIFE	4440 - 14
C23	HARVESTER HEAD VALVE BRACKET	4460 - 18
D9	HARVESTER HEAD WIRING HARNESS	4460 - 28
A10	HEAD,HARVESTER	4440 - 2
B7	HEAD,HARVESTER	4440 - 16
C11	HOSES,PAINT MARKER RESERVOIR	4460 - 8
C17	HYD.HOSES,CUTTING SAW	4460 - 14
C23	HYD.HOSES,HARVESTER HEAD	4460 - 18
C7	HYDRAULIC DRIVE MOTOR FEED ROLL	4460 - 4
C5	HYDRAULIC DRIVE MOTOR, CUTTING SAW	4460 - 2
C3	HYDRAULIC DRIVE MOTOR, FEED WHEEL	4450 - 2
A18	HYDRAULIC HOSES,CUTTING SAW HYDRAULIC DRIVE MOTOR	4440 - 6
C21	HYDRAULIC HOSES,HARVESTER HEAD	4460 - 16
D9	HYDRAULIC HOSES,HARVESTER HEAD	4460 - 28
D1	HYDRAULIC HOSES,HARVESTER HEAD FEED WHEEL	4460 - 20
A18	HYDRAULIC MOTOR,CUTTING SAW	4440 - 6
E5	HYDRAULIC SYSTEM CONTROL VALVE	4462 - 2

I

B3	INDICATOR,CUTTING SAW	4440 - 12

J

D7	JUNCTION BLOCK,CONTROL VALVE WIRE LEAD	4460 - 26

K

B1	KIT,AUTOMATIC SAW CHAIN TIGHTENER	4440 - 10
E23	KIT,TILT CYLINDER REPAIR	4465 - 2
F1	KIT,TILT CYLINDER REPAIR	4465 - 4
B5	KNIFE,HARVESTER HEAD	4440 - 14

L

A14	LENGHT MEASURING FOR FEED WHEEL, OPTION, EUCALYPTUS	4440 - 3C
B19	LINK, DOUBLE DAMP LINK 100/100 MM	4443 - 6
B21	LINK, DOUBLE DAMP LINK 80/100 MM	4443 - 8
B23	LINK, NO-DAMP LINK, 80/100 MM AND 100/100 MM	4443 - 10
D3	LUBRICATION HOSES,CUTTING SAW	4460 - 22

M

F15	MEASURING ROLL CYLINDER	4465 - 18
F17	MEASURING ROLL CYLINDER	4465 - 20
F15	MEASURING ROLL CYLINDER SEAL KIT	4465 - 18
F17	MEASURING ROLL CYLINDER SEAL KIT	4465 - 20
A10	MEASURING WHEEL	4440 - 2
A10	MEASURING WHEEL ARM	4440 - 2
A10	MEASURING WHEEL CYLINDER	4440 - 2
D13	MOUNTING PLATE,CONTROL VALVE CONTROLLER	4460 - 30

N

B23	NO-DAMP LINK, 80/100 AND 100/100 MM, OPTION	4443 - 10

O

C9	OIL PUMP,CUTTING SAW	4460 - 6

P

C13	PAINT MARKER PUMP CONTROL VALVE	4460 - 10
C11	PAINT MARKER RESERVOIR	4460 - 8
C11	PAINT MARKER RESERVOIR CAP	4460 - 8
C11	PAINT MARKER RESERVOIR HOSES	4460 - 8
C11	PAINT MARKER STATIONARY KNIFE	4460 - 8
C13	PAINT MARKER SYSTEM PUMP	4460 - 10
C13	PUMP,PAINT MARKER SYSTEM	4460 - 10

R

C9	REPAIR KIT,CUTTINGSAW OIL PUMP	4460 - 6
C7	REPAIR KIT,FEED ROLL HYDRAULIC DRIVE MOTOR	4460 - 4
C11	RESERVOIR,PAINT MARKER	4460 - 8
B13	ROTATOR AV12S, OPTION	4443 - 2
B15	ROTATOR AV14S, OPTION	4443 - 4
E11	ROTATOR BLOCK,CONTROL VALVE	4462 - 8
B17	ROTATOR FASTEN BOLTS AND NUTS	4443 - 5A

S

A16	SAW CUTTING BAR	4440 - 4
F3	SAW CYLINDER	4465 - 6
F5	SAW CYLINDER	4465 - 8
F3	SAW CYLINDER SEAL KIT	4465 - 6
F5	SAW CYLINDER SEAL KIT	4465 - 8
A16	SAW TRANSMISSION	4440 - 4
A16	SAW TRANSMISSION CYLINDER	4440 - 4
C15	SAW VALVE BLOCK	4460 - 12
F3	SEAL KIT SAW CYLINDER	4465 - 6
F5	SEAL KIT SAW CYLINDER	4465 - 8
F11	SEAL KIT,CUTTING KNIFE CYLINDER	4465 - 14
F13	SEAL KIT,CUTTING KNIFE CYLINDER	4465 - 16
F7	SEAL KIT,FEED ROLLS CYLINDER	4465 - 10

ALPHABETICAL INDEX - CONTINUED

GRID		PAGE
F9	SEAL KIT,FEED ROLLS CYLINDER	4465 - 12
F15	SEAL KIT,MEASURING ROLL CYLINDER	4465 - 18
F17	SEAL KIT,MEASURING ROLL CYLINDER	4465 - 20
D19	SENSORS, TM 10	4460 - 36
C11	STATIONARY KNIFE,PAINT MARKER	4460 - 8

T

E17	TILT BLOCK,CONTROL VALVE	4462 - 14
E23	TILT CYLINDER	4465 - 2
F1	TILT CYLINDER	4465 - 4
E23	TILT CYLINDER REPAIR KIT	4465 - 2
F1	TILT CYLINDER REPAIR KIT	4465 - 4
D15	TM 10, BRACKET	4460 - 32
D17	TM 10, ELECTRICAL SYSTEM	4460 - 34
D19	TM 10, SENSORS	4460 - 36
D19	TM 10, SENSORS, ELECTRICAL SYSTEMS	4460 - 36
C1	TOOL, KNOCK-OUT, OPTION	4443 - 12
A16	TRANSMISSION SAW	4440 - 4

U

A22	UREA, AUTOMATIC SAW CHAIN TIGHTENER	4440 - 9A

V

E21	VALVE BLOCK, CHAIN TIGHTENER	4462 - 18

W

C3	WHEEL,FEED	4450 - 2
A10	WHEEL,MEASURING	4440 - 2
D7	WIRE LEADS,CONTROL VALVE	4460 - 26
D9	WIRING HARNESS,HARVESTER HEAD	4460 - 28

MEASURING WHEEL,ARM AND CYLINDER
TO SERIAL NO. -XXX

WJT0364 -UN-01JUN01

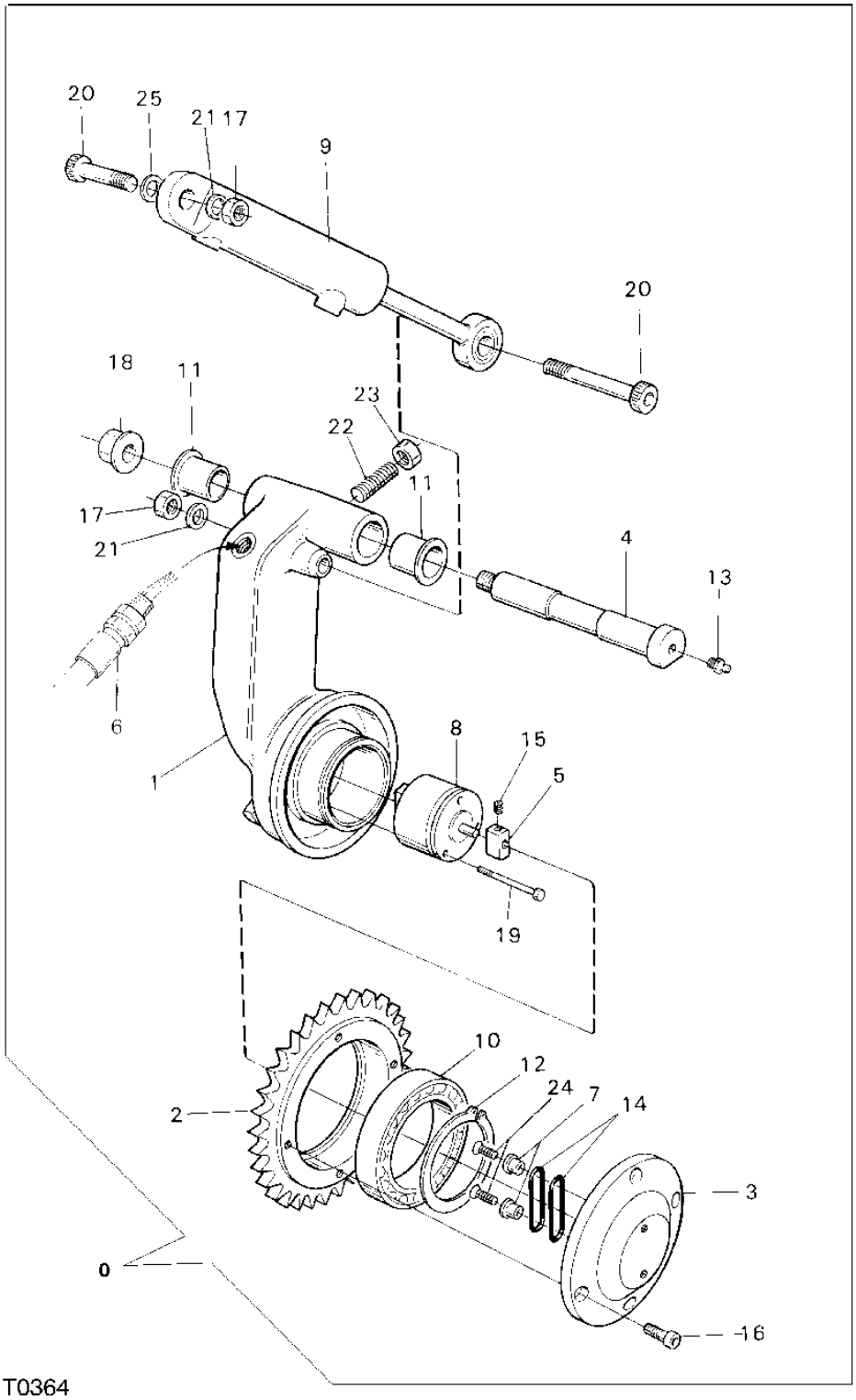

THIS PARTS LISTING IS CONTINUED

MEASURING WHEEL,ARM AND CYLINDER
TO SERIAL NO. -XXX

KEY	PART NO.	PART NAME	QTY	SERIAL NO.	REMARKS
0	F049249	MEASURING WHEEL	1		INCL. POS. 1...25
1	F013232	ARM	1		
2	F049312	MEASURING WHEEL	1		
3	F013230	COVER	1		
4	F050528	SHAFT	1		
5	F011483	PLANET PINION CARRIER	1		
6	.....	CABLE	1		SEE PAGE 4460-28, (OPTION 4460-36)
7	F013228	RETAINER	2		
8	F060369	SENSOR	1		
9	F005553	CYLINDER	1	-1382	SEE PAGE 4465-18
	F062197	HYDRAULIC CYLINDER	1	1383-	SEE PAGE 4465-20
10	F005555	BEARING	1		
11	F046323	BUSHING	2		
12	F003362	RING	1		
13	F005626	FITTING	1		
14	F005635	O-RING	2		
15	F002903	BOLT	1		
16	F012683	CAP SCREW	4		
17	F003588	LOCK NUT	2		
18	F005494	NUT	1		
19	F012791	BOLT	3		
20	F013226	BOLT	2		
21	F005551	LOCK WASHER	2		
22	F005483	SCREW	1		
23	F003565	NUT	1		
24	F013225	BOLT	1		
25	F020176	WASHER	1		

MEASURING WHEEL,ARM AND CYLINDER
FROM SERIAL NO. XXX-

WJTF3078 -UN-20JUN05

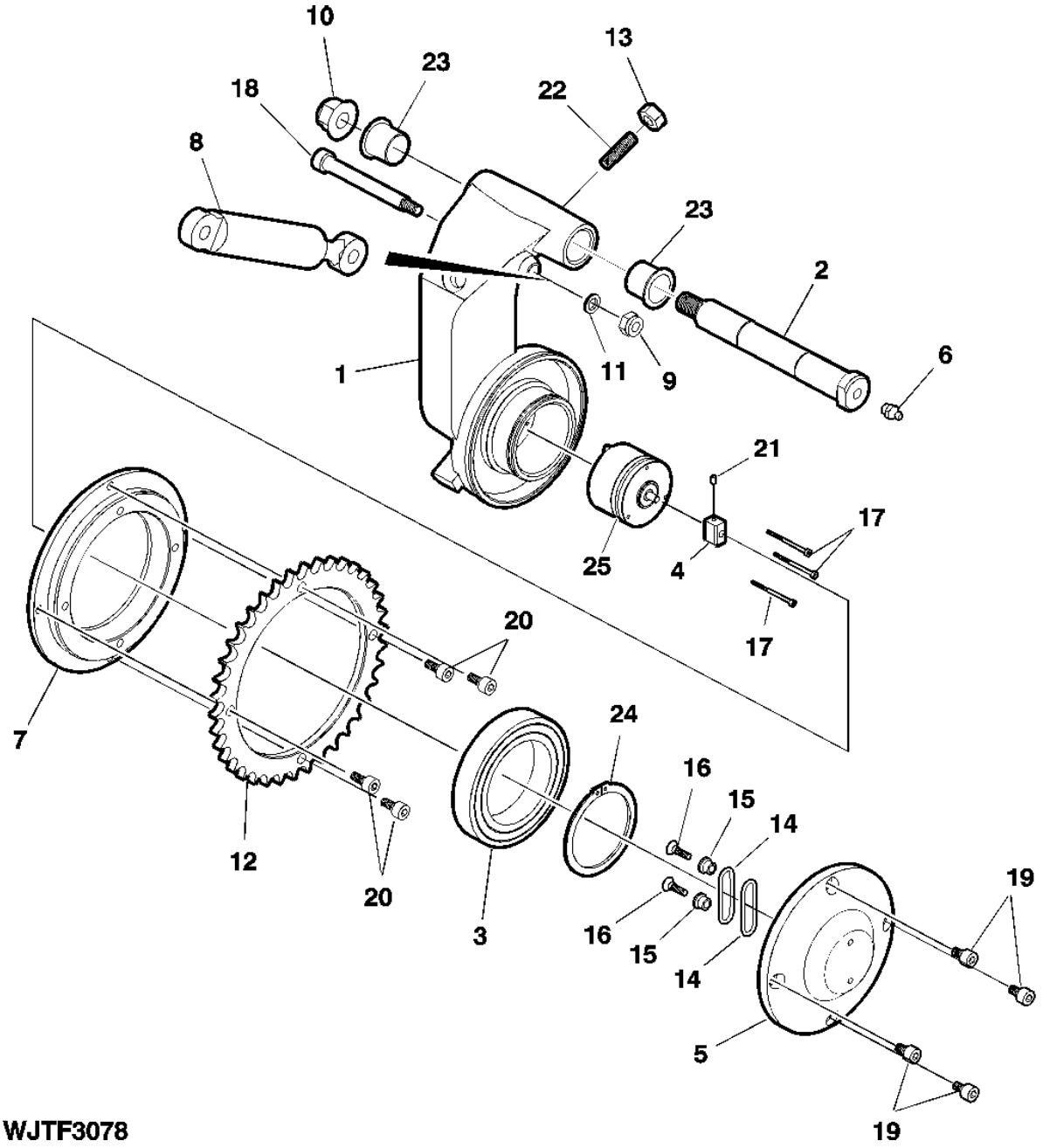

THIS PARTS LISTING IS CONTINUED

A13

MEASURING WHEEL,ARM AND CYLINDER
FROM SERIAL NO. XXX-

KEY	PART NO.	PART NAME	QTY	SERIAL NO.	REMARKS
0	F617354	MEASURING WHEEL	1		
1	F013232	ARM	1		
2	F050528	SHAFT	1		
3	F005555	BEARING	1		
4	F011483	PLANET PINION CARRIER	1		
5	F013230	COVER	1		
6	58M7013	LUBRICATION FITTING	1		
7	F617356	HUB	1		
8	F062197	HYDRAULIC CYLINDER	1		
9	F003588	LOCK NUT	1		
10	F005494	NUT	1		
11	F005551	LOCK WASHER	1		
12	F617310	MEASURING WHEEL	1		HD
	F617355	MEASURING WHEEL	1		STANDARD
13	F003565	NUT	1		
14	F005635	O-RING	2		
15	F013228	RETAINER	2		
16	F013225	BOLT	2		
17	F012791	BOLT	3		
18	F013226	BOLT	1		
19	F012683	CAP SCREW	4		
20	F008572	SCREW	4		
21	F002903	BOLT	1		
22	F005483	SCREW	1		
23	F046323	BUSHING	2		
24	F003362	RING	1		
25	F067349	SENSOR	1		(REPLACES F060369)

LENGHT MEASURING FOR FEED WHEEL, OPTION, EUCALYPTUS

WJTF3389 -UN-20JUN05

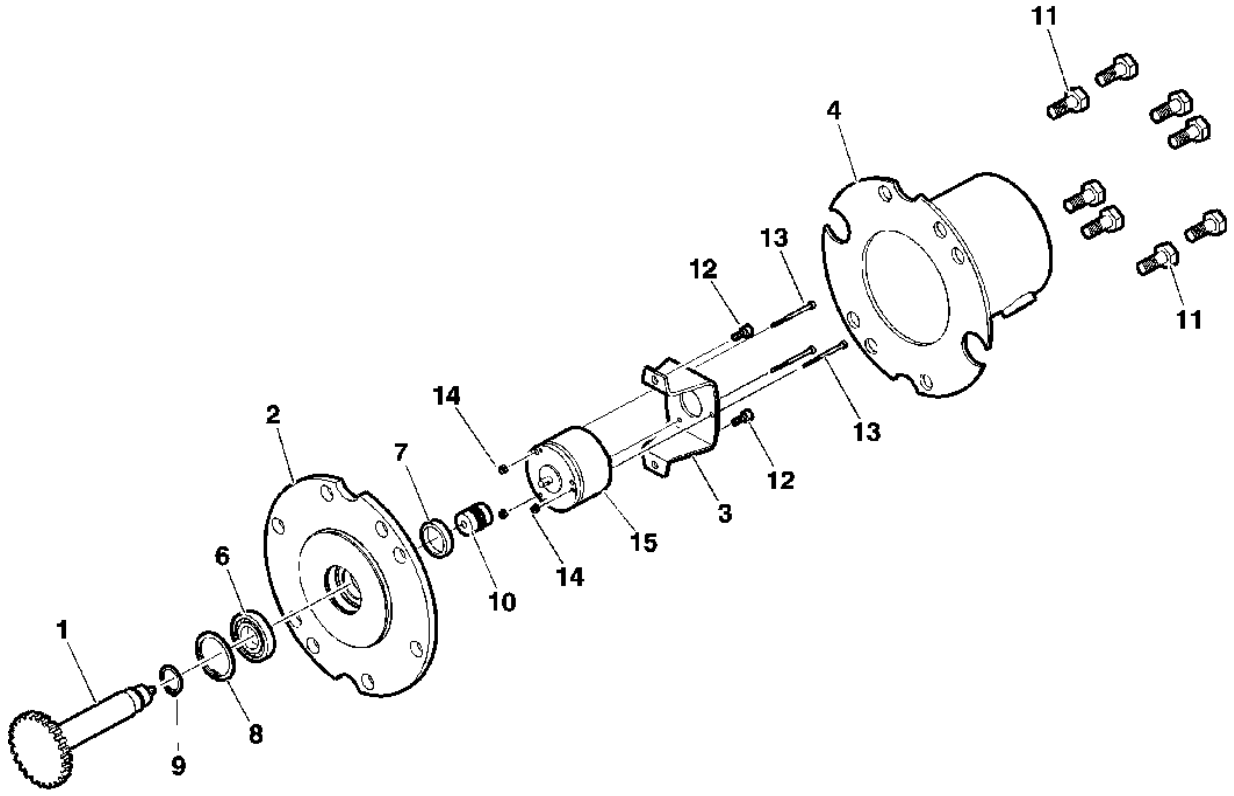

WJTF3389

THIS PARTS LISTING IS CONTINUED

A15

LENGHT MEASURING FOR FEED WHEEL, OPTION, EUCALYPTUS

KEY	PART NO.	PART NAME	QTY	SERIAL NO.	REMARKS
0	F601460	KIT	1		
1	F601288	SHAFT	1		
2	F601173	HOLDER	1		
3	F601183	BRACKET	1		
4	F601209	COVER	1		
5	F601898	COVER	1		
6	F055929	BALL BEARING	1		
7	F055927	SEAL	1		
8	F003370	CLIP	1		
9	F003357	SNAP RING	1		
10	F010765	CLUTCH	1		
11	19M9647	CAP SCREW	8		M12 X 25
12	19M9719	SCREW	2		M5 X 12
13	19M9470	SCREW	3		
14	F003583	LOCK NUT	3		
15	F067347	SENSOR	1		(REPLACES F055931), SEE PAGE 4460-29A

SAW TRANSMISSION,CUTTING BAR AND CYLINDER

WJT0358 -UN-01JUN01

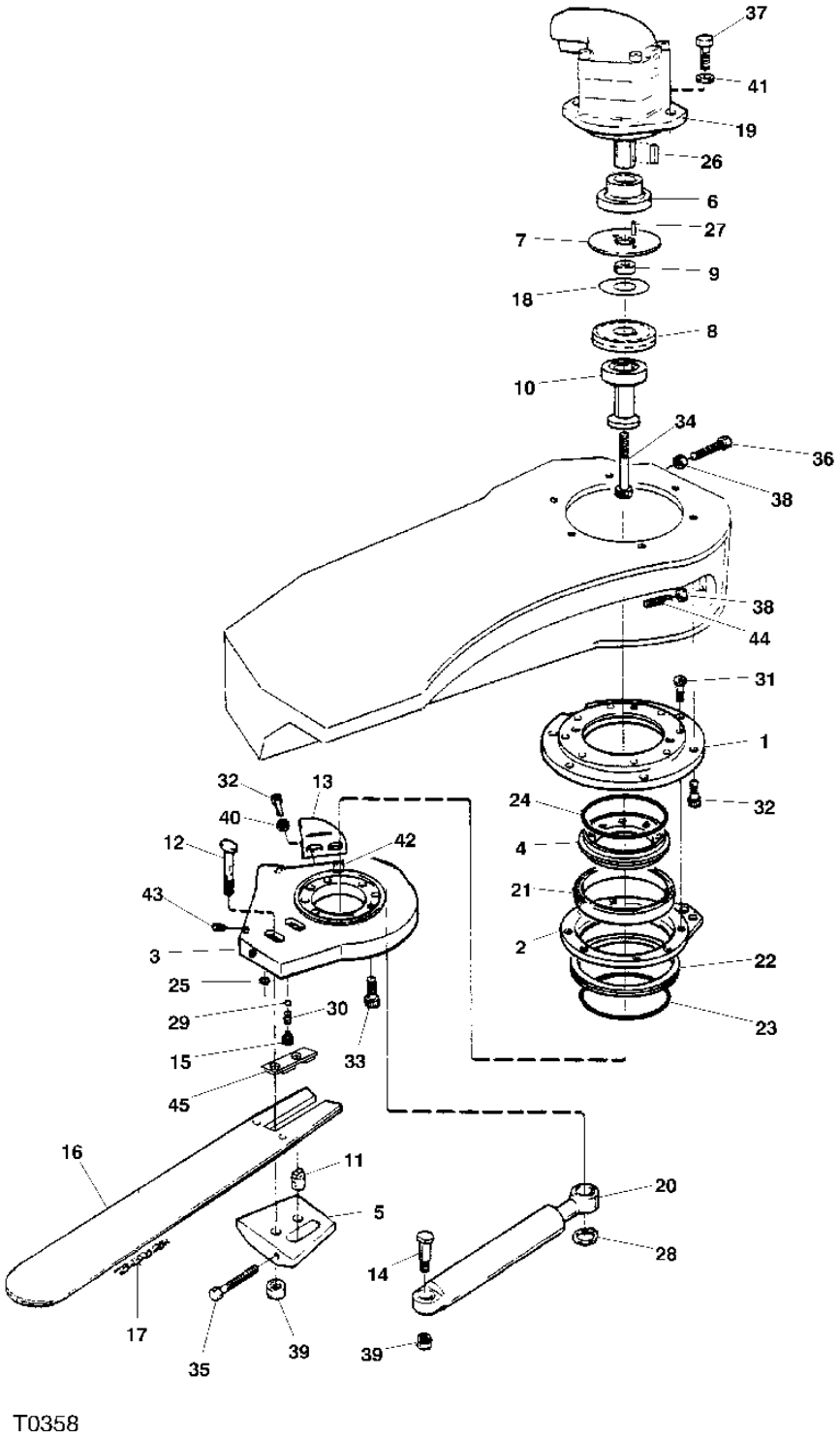

THIS PARTS LISTING IS CONTINUED

A17

SAW TRANSMISSION,CUTTING BAR AND CYLINDER

KEY	PART NO.	PART NAME	QTY	SERIAL NO.	REMARKS
1	F048064	BRACKET	1		
2	F009841	RING	1		
3	F009831	HOLDER	1		
4	F009839	RING	1		
5	F009835	HOLDER	1		
6	F600657	PLANET PINION CARRIER	1		
7	F011208	WASHER	1		
8	F020180	CHAIN SPROCKET	1		
9	F011209	SLEEVE	1		
10	F019801	GUARD	1		
11	F011217	TIGHTENER	1		
12	F021404	BOLT	2		
13	F009836	END PLATE	1		
14	F014614	PIN	1		
15	F009848	PLUG	1		
16	F061761	SAW	1		82 CM, 15MM, 2MM
	F061763	SAW BLADE	1		82 CM, 15MM, 2MM, UREA
	F033631	KNIFE	1		75 CM, 10MM, 2MM
17	F064023	SAW CHAIN	1		93 LINKS
	F064019	SAW CHAIN	1		85 LINKS
18	F020181	SOLID SHIM	AR		
19	.....	HYDRAULIC MOTOR	1		SEE PAGE 4460-2
20	F051120	HYDRAULIC CYLINDER	1	-1382	SEE PAGE 4465-6
	F062198	HYDRAULIC CYLINDER	1	1383-	SEE PAGE 4465-8
21	F005571	BALL BEARING	1		
22	F005506	V-RING SEAL	1		
23	F004712	O-RING	1		
24	F013914	O-RING	1		
25	F013913	O-RING	1		
26	.....	WEDGE	1		
27	F600351	SAW	4		
28	F003357	SNAP RING	1		
29	F013607	BALL	1		
30	F013895	SPRING	1		
31	F008572	SCREW	8		
32	F003411	BOLT	8		
33	F008646	SCREW	8		
34	F005572	BOLT	1		
35	F005572	BOLT	1		
36	F012712	SCREW	1		
37	F003542	SCREW	2		
38	F003564	NUT	1		
39	F011198	LOCK NUT	3		
40	F003338	WASHER	2		
41	F003170	WASHER	2		
42	F010192	PLATE	1		
43	F012758	SCREW	3		
44	F024428	SET SCREW	1		
45	F027648	GUSSET	1		

AUTOMATIC SAW CHAIN TIGHTENER, STANDARD

WJTF2250 -UN-18JUN04

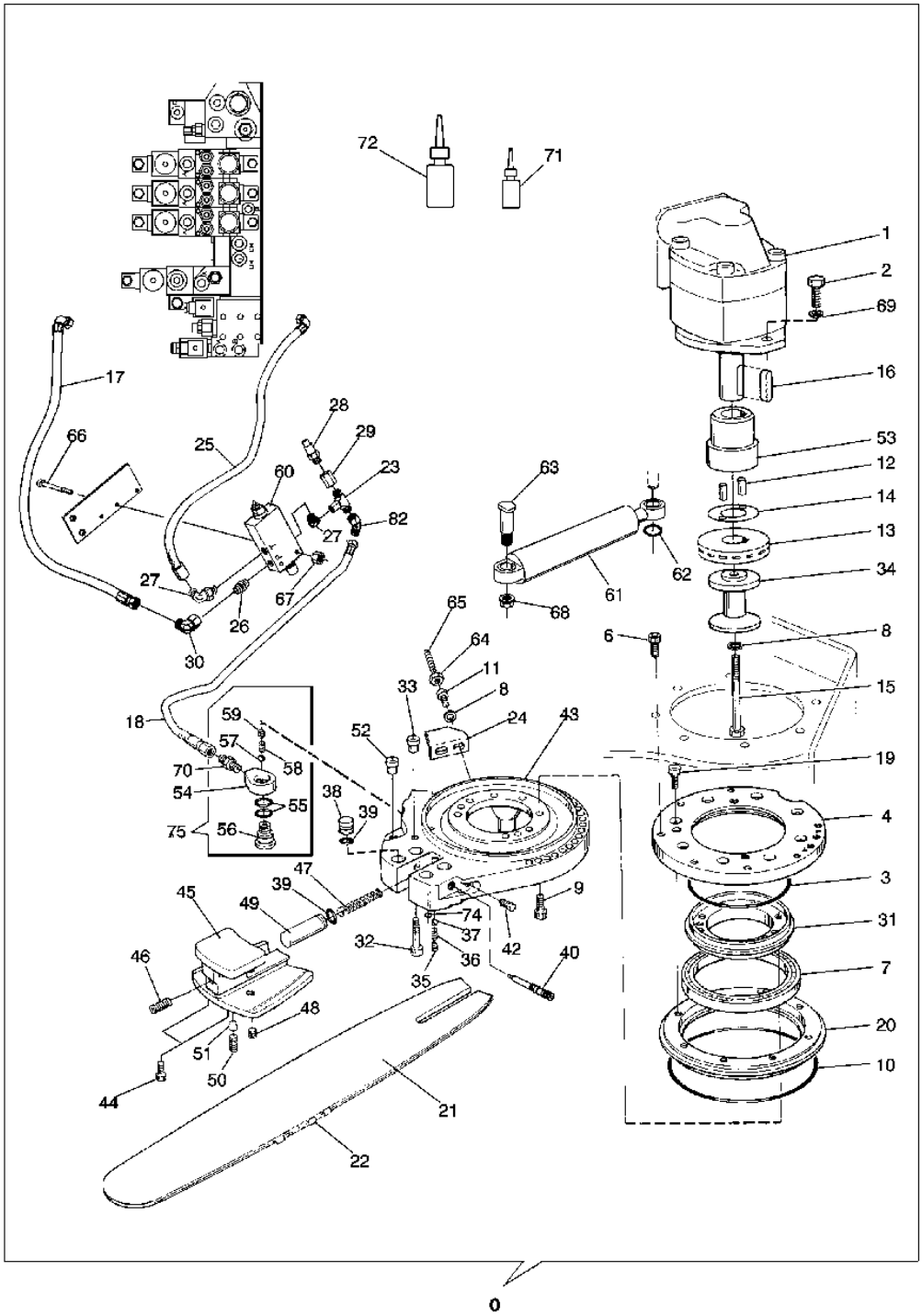

TF2250

THIS PARTS LISTING IS CONTINUED

A19

AUTOMATIC SAW CHAIN TIGHTENER, STANDARD

KEY	PART NO.	PART NAME	QTY	SERIAL NO.	REMARKS
0	F048116	TIGHTENER	1		
1	F005473	HYDRAULIC MOTOR	1	-XXX	SEE PAGE 4460-2
	F066799	HYDRAULIC MOTOR	1	XXX-	
2	F003542	SCREW	2		
3	F013914	O-RING	1		
4	F048064	BRACKET	1		
6	F010537	BOLT	6		
7	F005571	BALL BEARING	1		
8	F008262	LOCK WASHER	3		
9	F008646	SCREW	13		
10	F004712	O-RING	1		
11	F003411	BOLT	2		
12	F600351	SAW	4		
13	F046098	CHAIN SPROCKET	1		
14	F020181	SOLID SHIM	1		
15	F005572	BOLT	1		
16	F035017	WEDGE	1		
17	F046606	HYDRAULIC HOSE - FABRICATE	1		
18	F056373	HYDRAULIC HOSE - FABRICATE	1		
19	F008572	SCREW	8		
20	F009841	RING	1		
21	F061761	SAW	1		82 CM, 15MM, 2MM
	F061763	SAW BLADE	1		82 CM, 15MM, 2MM, UREA
	F033631	KNIFE	1		75 CM, 10MM, 2MM
22	F049094	SAW CHAIN	1		93 LINKS
	F064019	SAW CHAIN	1		85 LINKS
23	F005076	CONNECTOR	1		
24	F009836	END PLATE	1		
25	F046793	HYDRAULIC HOSE - FABRICATE	1		
26	F005057	FITTING	1		
27	F024599	ELBOW FITTING	2		
28	F017320	FITTING	1		
29	F024364	FITTING	1		
30	F022417	ELBOW FITTING	1		
31	F041449	RING	1		
32	F010749	BOLT	1		
33	F038415	SNAP RING	1		
34	F038426	GUARD	1		
35	F009848	PLUG	1		
36	F053347	SPRING	1		
37	F013607	BALL	1		
38	F034554	LOCK PLATE	4		
39	F004573	O-RING	5		
40	F034556	FITTING	1		
42	F034551	SCREW	1		

AUTOMATIC SAW CHAIN TIGHTENER, STANDARD

WJTF2250 -UN-18JUN04

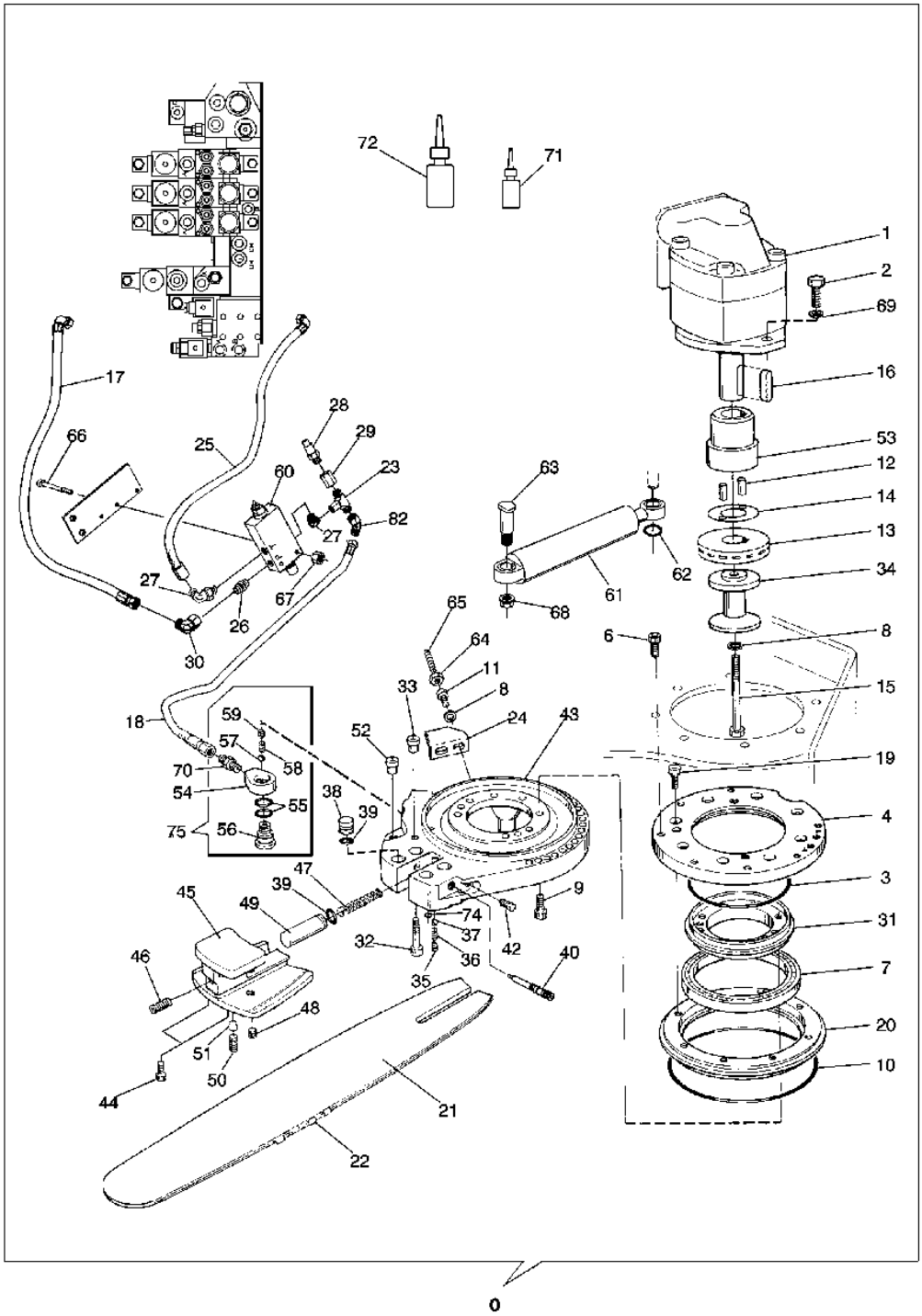

TF2250

THIS PARTS LISTING IS CONTINUED

AUTOMATIC SAW CHAIN TIGHTENER, STANDARD

KEY	PART NO.	PART NAME	QTY	SERIAL NO.	REMARKS
43	F038416	BRACKET	1		
44	F038417	SCREW	2		10 MM, SLOT
	F062656	SCREW	2		15 MM, SLOT
45	F038418	HOLDER	1		10 MM, SLOT
	F062020	HOLDER	1		15 MM, SLOT
46	F020022	SCREW	1		
47	F034553	SPRING	1		
48	F026206	SET SCREW	2		
49	F034552	PISTON	1		
50	F030750	SCREW	1		
51	F034558	LOCK PLATE	1		
52	F018111	PLUG	1		
53	F600380	PLANET PINION CARRIER	1		
54	F034559	FUEL SUPPLY BANJO FITTING	1		
55	F017216	O-RING	2		
56	F047315	HOLLOW SCREW	1		
57	F047316	BALL	1		
58	F047317	SPRING	1		
59	F047318	SCREW	1		
60	F047320	HYDRAULIC PRESSURE VALVE	1		
61	F051120	HYDRAULIC CYLINDER	1	-1382	SEE PAGE 4465-6
	F062198	HYDRAULIC CYLINDER	1	1383-	SEE PAGE 4465-8
62	F003357	SNAP RING	1		
63	F014614	PIN	1		
64	F003564	NUT	1		
65	F008276	SCREW	1		
66	F022057	SCREW	2		
67	F003586	LOCK NUT	2		
68	F011198	LOCK NUT	1		
69	F002805	LOCK WASHER	2		
70	F031740	FITTING	1		
71	F033710	ADHESIVE	1		
72	F008296	FLUID	1		
73	F013594	ELBOW FITTING	1		
74	F013913	O-RING	1		
75	F047323	SCREW	1		INCL.ITEM. 55-59

AUTOMATIC SAW CHAIN TIGHTENER, UREA

WJTF2810 -UN-30JUN04

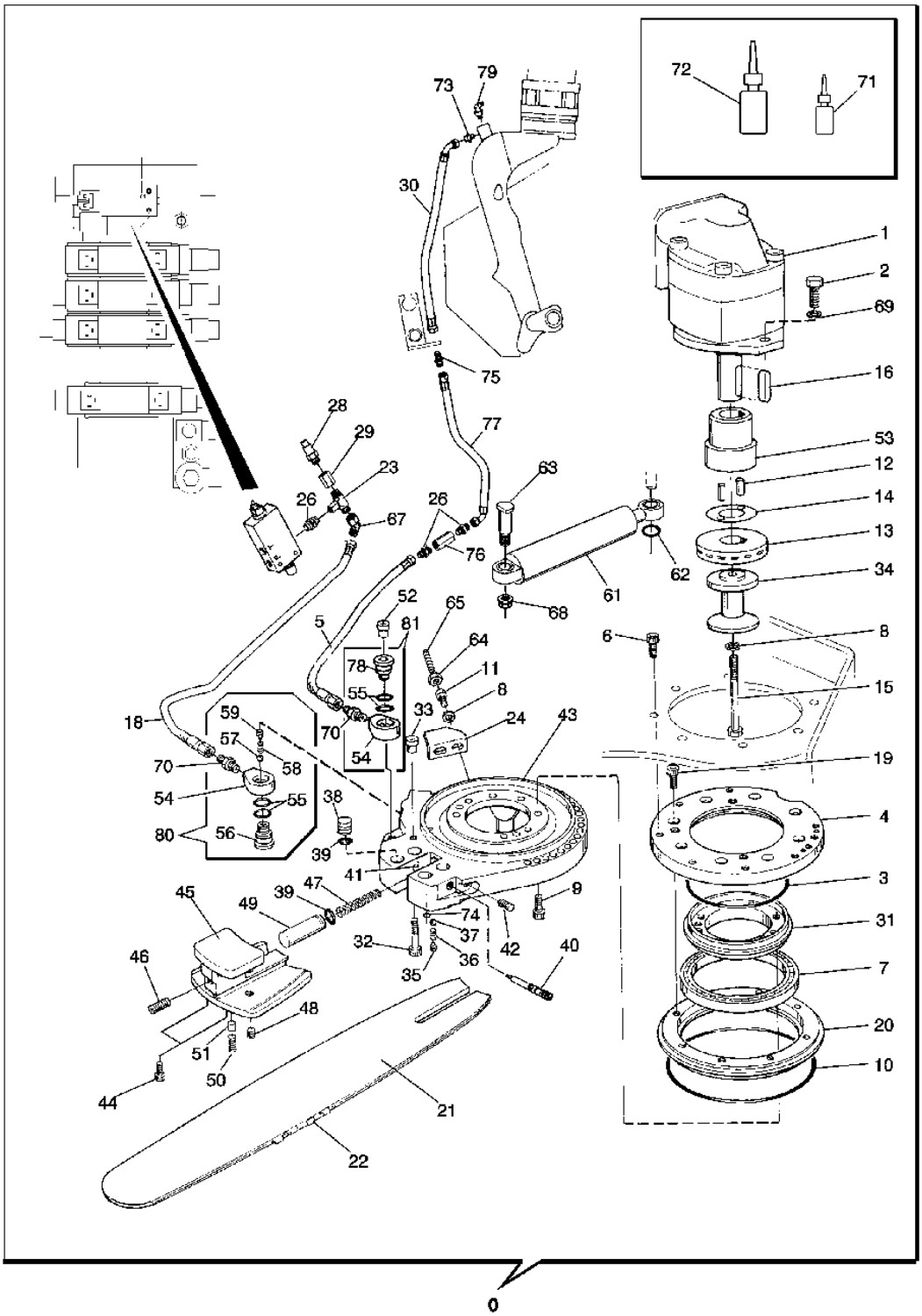

TF2810

THIS PARTS LISTING IS CONTINUED

A23

AUTOMATIC SAW CHAIN TIGHTENER, UREA

KEY	PART NO.	PART NAME	QTY	SERIAL NO.	REMARKS
0	F048177	TIGHTENER	1		
1	F005473	HYDRAULIC MOTOR	1	-XXX	SEE PAGE 4460-2
	F066799	HYDRAULIC MOTOR	1	XXX-	
2	F003542	SCREW	2		
3	F013914	O-RING	1		
4	F048064	BRACKET	1		
5	F041496	HYDRAULIC HOSE - FABRICATE	1		
6	F010537	BOLT	6		
7	F005571	BALL BEARING	1		
8	F008262	LOCK WASHER	3		
9	F008646	SCREW	13		
10	F004712	O-RING	1		
11	F003411	BOLT	2		
12	F600351	SAW	4		
13	F046098	CHAIN SPROCKET	1		
14	F020181	SOLID SHIM	1		
15	F005572	BOLT	1		
16	.....	WEDGE	1		
18	F056373	HYDRAULIC HOSE - FABRICATE	1		
19	F008572	SCREW	8		
20	F009841	RING	1		
21	F061761	SAW	1		82 CM, 15MM, 2MM
	F061763	SAW BLADE	1		82 CM, 15MM, 2MM, UREA
	F033631	KNIFE	1		75 CM, 10MM, 2MM
22	F064023	SAW CHAIN	1		93 LINKS
	F064019	SAW CHAIN	1		85 LINKS
23	F005076	CONNECTOR	1		
24	F009836	END PLATE	1		
26	F005057	FITTING	1		
28	F017320	FITTING	1		
29	F027231	THREADED NIPPLE	1		
30	F051121	HYDRAULIC HOSE	1		
31	F041449	RING	1		
32	F010749	BOLT	1		
33	F038415	SNAP RING	1		
34	F038426	GUARD	1		
35	F009848	PLUG	1		
36	F053347	SPRING	1		
37	F013607	BALL	1		
38	F034554	LOCK PLATE	4		
39	F004573	O-RING	5		
40	F034555	FITTING	1		
41	F034557	O-RING	1		
42	F034551	SCREW	1		

AUTOMATIC SAW CHAIN TIGHTENER, UREA

WJTF2810 -UN-30JUN04

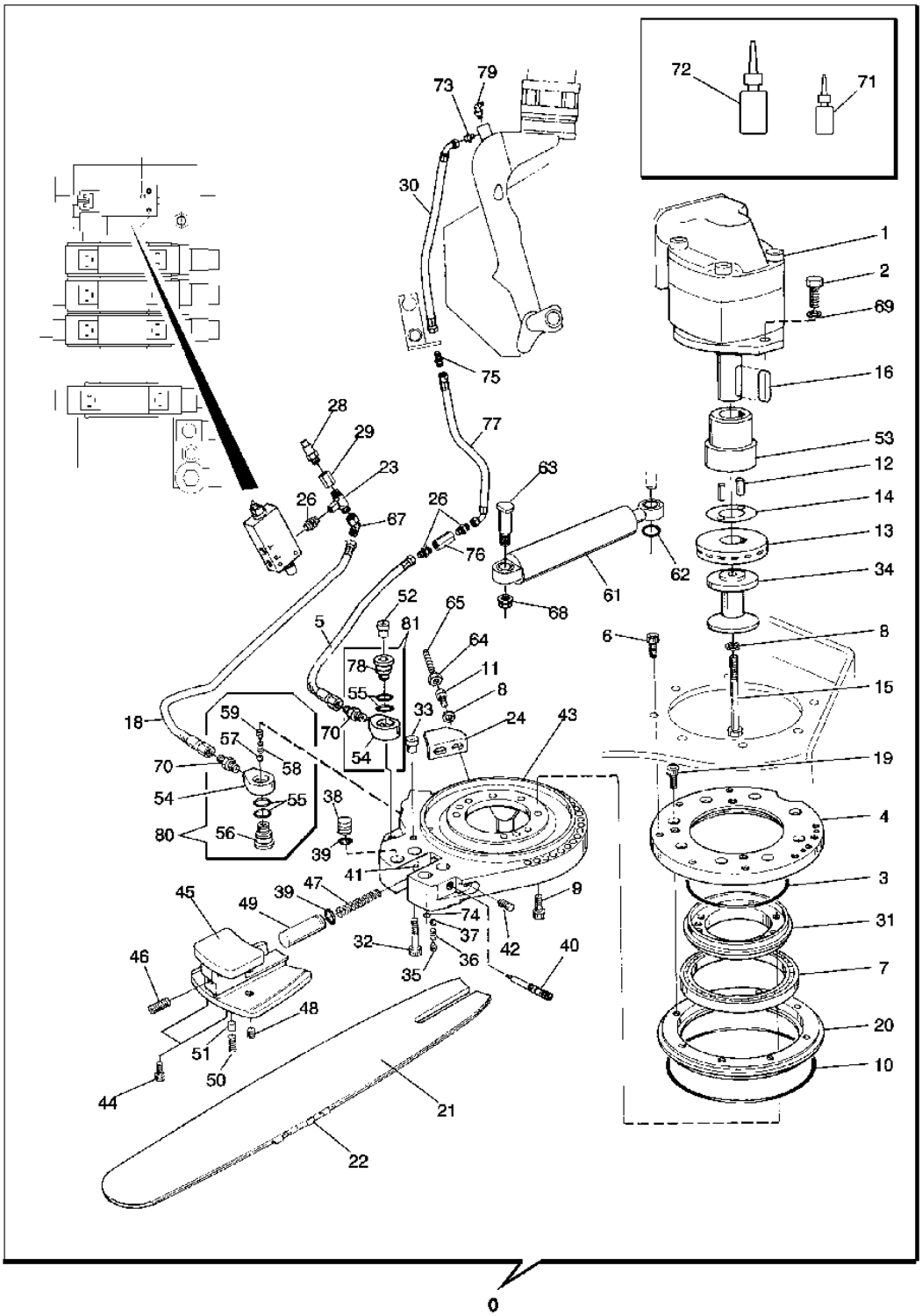

TF2810

THIS PARTS LISTING IS CONTINUED

A25

AUTOMATIC SAW CHAIN TIGHTENER, UREA

KEY	PART NO.	PART NAME	QTY	SERIAL NO.	REMARKS
43	F038416	BRACKET	1		
44	F038417	SCREW	2		10 MM, SLOT
	F062656	SCREW	2		15 MM, SLOT
45	F038418	HOLDER	1		10 MM, SLOT
	F062020	HOLDER	1		15 MM, SLOT
46	F020022	SCREW	1		
47	F034553	SPRING	1		
48	F026206	SET SCREW	2		
49	F034552	PISTON	1		
50	F030750	SCREW	1		
51	F034558	LOCK PLATE	1		
52	F018111	PLUG	1		OPTION
53	F600380	PLANET PINION CARRIER	1		
54	F034559	FUEL SUPPLY BANJO FITTING	1		
55	F017216	O-RING	4		
56	F047315	HOLLOW SCREW	1		
57	F047316	BALL	1		
58	F047317	SPRING	1		
59	F047318	SCREW	1		
61	F062198	HYDRAULIC CYLINDER	1		SEE PAGE 4460-46
62	F003357	SNAP RING	1		
63	F014614	PIN	1		
64	F003564	NUT	1		
65	F008276	SCREW	1		
67	F013594	ELBOW FITTING	1		
68	F011198	LOCK NUT	1		
69	F002805	LOCK WASHER	2		
70	F031740	FITTING	1		
71	F033710	ADHESIVE	AR		
72	F008296	FLUID	AR		
73	F005057	FITTING	1		
74	F013913	O-RING	1		
75	F024601	FITTING	1		
76	F020746	CHECK VALVE	1		
77	F053697	HYDRAULIC HOSE	1		
78	F034560	HOLLOW SCREW	1		
79	F031744	ELBOW FITTING	1		
80	F047323	SCREW	1		INCL. ITEMS 55-59, FOR CHAIN TIGHTENER
81	F038815	FUEL SUPPLY BANJO FITTING	1		INCL. ITEMS 54, 55, 78

AUTOMATIC CHAIN TIGHTENER KIT
(MANUAL TO STD. AUTOMATIC)

WJTF2190 -UN-17JUN04

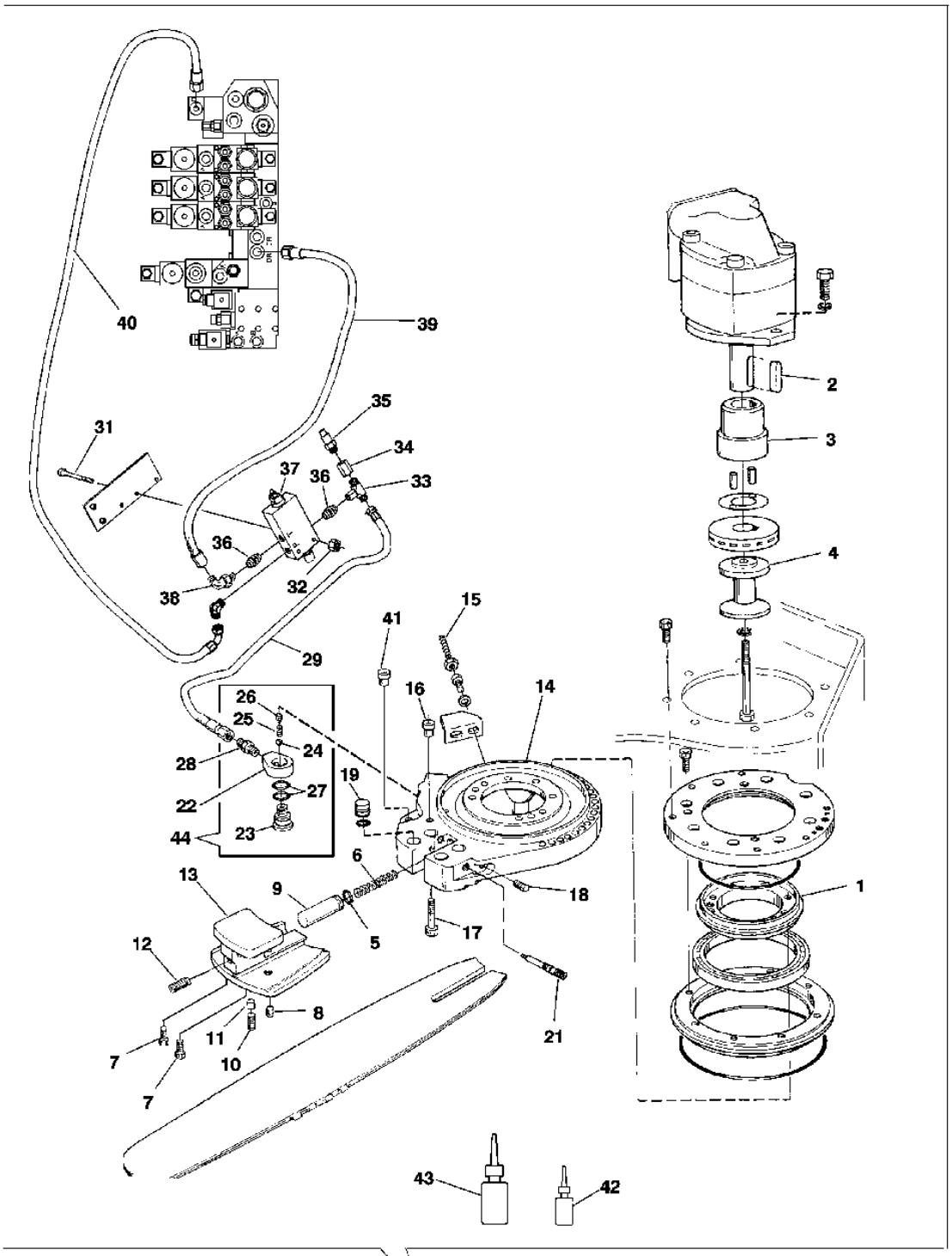

TF2190

THIS PARTS LISTING IS CONTINUED

B2

AUTOMATIC CHAIN TIGHTENER KIT
(MANUAL TO STD. AUTOMATIC)

KEY	PART NO.	PART NAME	QTY	SERIAL NO.	REMARKS
0	F601858	KIT	1		INCL. POS. 1...41
1	F041449	RING	1		
2	F015978	WEDGE	1		
3	F038427	PLANET PINION CARRIER	1		
4	F038426	GUARD	1		
5	F004573	O-RING	5		
6	F034553	SPRING	1		
7	F038417	SCREW	2		10 MM, SLOT
	F062656	SCREW	2		15 MM, SLOT
8	F026206	SET SCREW	2		
9	F034552	PISTON	1		
10	F030750	SCREW	1		
11	F034558	LOCK PLATE	1		
12	F020022	SCREW	1		
13	F038418	HOLDER	1		10 MM, SLOT
	F062020	HOLDER	1		15 MM, SLOT
14	F038416	BRACKET	1		
15	F008276	SCREW	1		
16	F038415	SNAP RING	1		
17	F010749	BOLT	1		
18	F034551	SCREW	1		
19	F034554	LOCK PLATE	4		
21	F034556	FITTING	1		
22	F034559	FUEL SUPPLY BANJO FITTING	1		
23	F047315	HOLLOW SCREW	1		
24	F047316	BALL	1		
25	F047317	SPRING	1		
26	F047318	SCREW	1		
27	F017216	O-RING	2		
28	F031740	FITTING	1		
29	F049013	HYDRAULIC HOSE - FABRICATE	1		
30	F024599	ELBOW FITTING	1		
31	F022163	BOLT	2		
32	F003586	LOCK NUT	2		
33	F005076	CONNECTOR	1		
34	F024364	FITTING	1		
35	F017320	FITTING	1		
36	F005057	FITTING	2		
37	F047320	HYDRAULIC PRESSURE VALVE	1		
38	F022417	ELBOW FITTING	1		
39	F043550	HYDRAULIC HOSE - FABRICATE	1		
40	F046801	HYDRAULIC HOSE - FABRICATE	1		
41	F018111	PLUG	1		
42	F033710	ADHESIVE	1		
43	F008296	FLUID	1		
44	F047323	SCREW	1		INCL. ITEM 23-27

CUTTING SAW ANGLE INDICATOR

WJTF1028 -UN-29JUN05

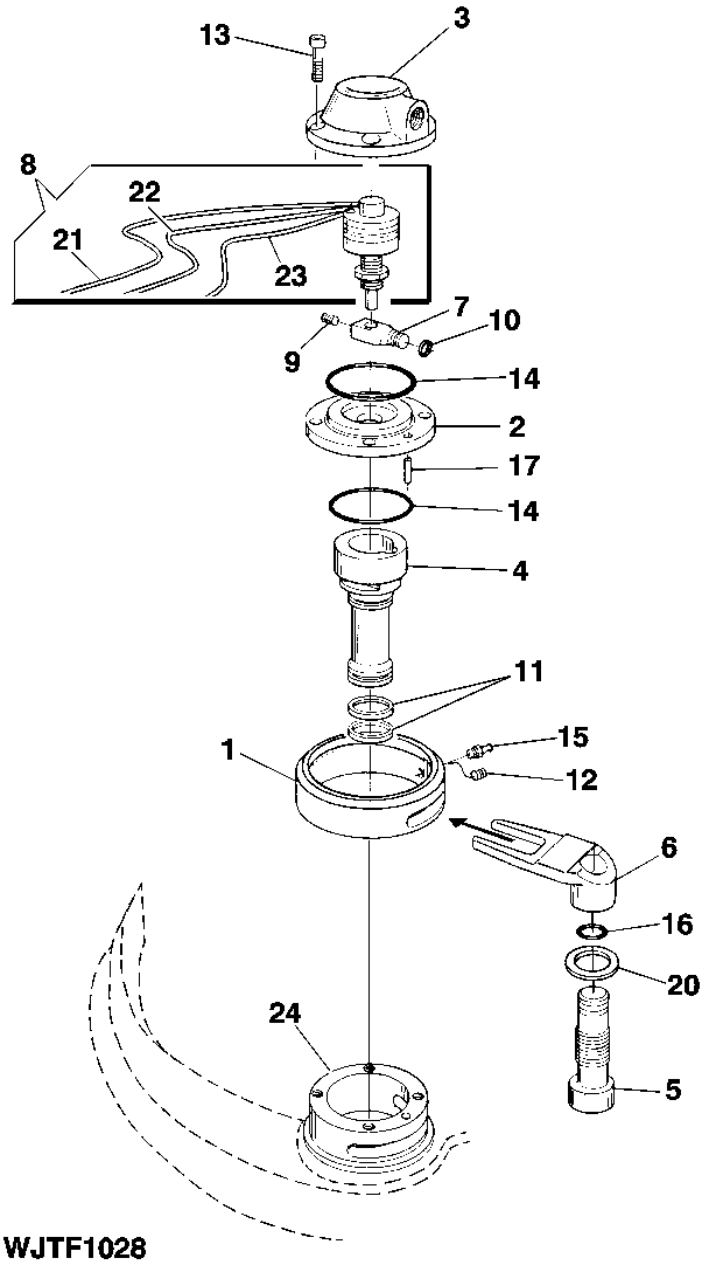

THIS PARTS LISTING IS CONTINUED

CUTTING SAW ANGLE INDICATOR

KEY	PART NO.	PART NAME	QTY	SERIAL NO.	REMARKS
1	F012645	RING	1		
2	F021246	FLANGE	1		
3	F012647	COVER	1		
4	F012648	SHAFT	1		
5	F017388	PIN	1		
6	F002915	FORK	1		
7	F012651	DRIVER	1		
8	F021413	POTENTIOMETER	1	-1599	
	F067033	POTENTIOMETER	1	1600-	
9	F002903	BOLT	1		
10	F002905	O-RING	1		
11	F002907	GUIDE	2		
12	F013637	PLUG	1		
13	F003412	CAP SCREW	4		
14	F010741	O-RING	2		
15	F005626	FITTING	1		
16	F004567	O-RING	1		
17	F002904	PIN	1		
20	F003342	WASHER	1		
21	.....	CABLE	1		
22	.....	CABLE	1		
23	.....	CABLE	1		
24	F012643	FRAME	1		WELD PART, FOR RIGH-HAND
	F012644	FRAME	1		WELD PART, FOR LEFT-HAND

HARVESTER HEAD MAIN PARTS

WJTF1419 -UN-13NOV02

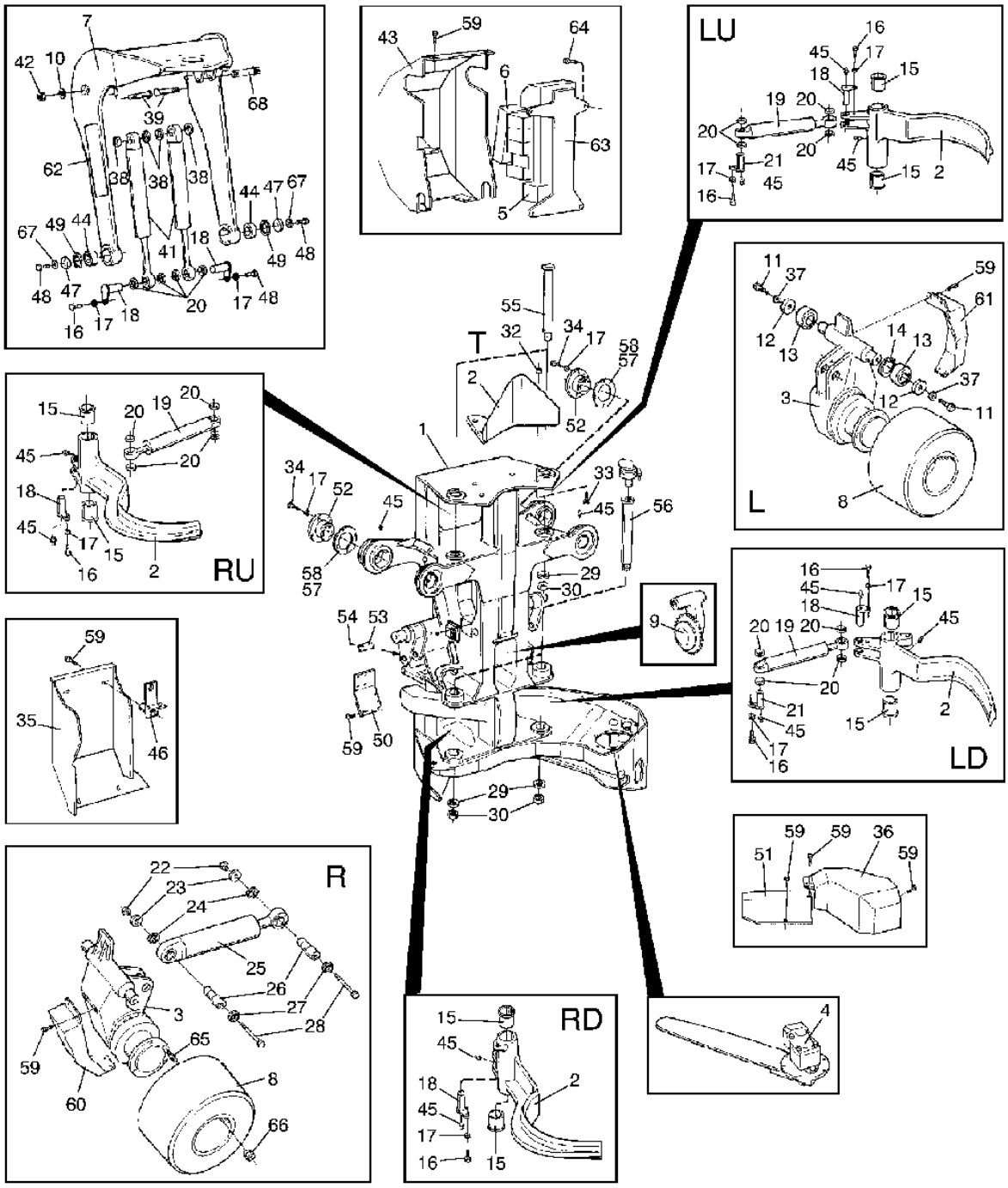

TF1419

THIS PARTS LISTING IS CONTINUED

B6

HARVESTER HEAD MAIN PARTS

KEY	PART NO.	PART NAME	QTY	SERIAL NO.	REMARKS
0	F046971	FRAME	1		
1	F046878	LEG	1		
2	F048101	DELIMBER	1		STD. KIT
	F604448	TOOL	2		R, STD
	F604449	TOOL	2		L, STD
	F017840	KNIFE	1		TOP, STD
	F049291	STATIONARY KNIFE	1		EUCALYPTUS KIT
	F604448	TOOL	2		R, EUCAL
	F604449	TOOL	2		L, EUCAL
	F050480	CUTTERHEAD	1		TOP, EUCAL
3	F034274	ARM	1		R
	F034273	ARM	1		L
4	F048116	TIGHTENER	1		SEE PAGE 4440-6
	F048177	TIGHTENER	1		SEE PAGE 4440-6
5	F048331	SPOOL VALVE	1		SEE PAGE 4462-2
6	F626692	COMPUTER HARDWARE ITEM	1		SEE PAGE 4460-26, (REPLACES F619559)
7	F602362	LINK	1		30MM
	F602359	LINK	1		20MM
8	F022484	WHEEL	2		TIRECO RUBBER
	F049324	WHEEL	2		GT RUBBER
	F011178	WHEEL	2		STEEL WHEEL
	F034742	WHEEL	2		EUCALYPTUS
	F049324	WHEEL	2		ALUSOFT
9	F049249	MEASURING WHEEL	1		SEE PAGE 4440-2
10	F030111	WASHER	2		FOR 30MM LINK ASSY
	F029919	WASHER	2		FOR 20MM LINK ASSY
11	F003554	SCREW	4		
12	F039611	WASHER	4		
13	F015049	BEARING	4		
14	F030978	SNAP RING	2		
15	F046322	BUSHING	8		
16	F003531	SCREW	10		
17	F005551	LOCK WASHER	18		
18	F046013	PIN	8		
19	F011445	CYLINDER	4	-1382	KNIVE CYLINDER. SEE PAGE 4465-14
	F062194	HYDRAULIC CYLINDER	4	1383-	KNIVE CYLINDER. SEE PAGE 4465-16
20	F011186	SPACER	20		
21	F046014	PIN	2		
22	F011198	LOCK NUT	2		
23	F007292	PLATE	2		
24	F007290	SPACER	2		
25	F017736	CYLINDER	1	-1382	ARM CYLINDER. SEE PAGE 4465-10
	F062195	HYDRAULIC CYLINDER	1	1383-	ARM CYLINDER. SEE PAGE 4465-12
26	F007291	PIN	2		
27	F003170	WASHER	10		
28	F003501	BOLT	2		
29	F012697	WASHER	4		
30	F018838	NUT	4		
32	F005494	NUT	4		
33	F003554	SCREW	4		
34	F003536	SCREW	8		
35	F600299	BRACKET	1		STANDARD
	F617796	COVER	1		
36	F612852	COVER	1		
37	F005012	LOCK WASHER	4		

HARVESTER HEAD MAIN PARTS

WJTF1419 -UN-13NOV02

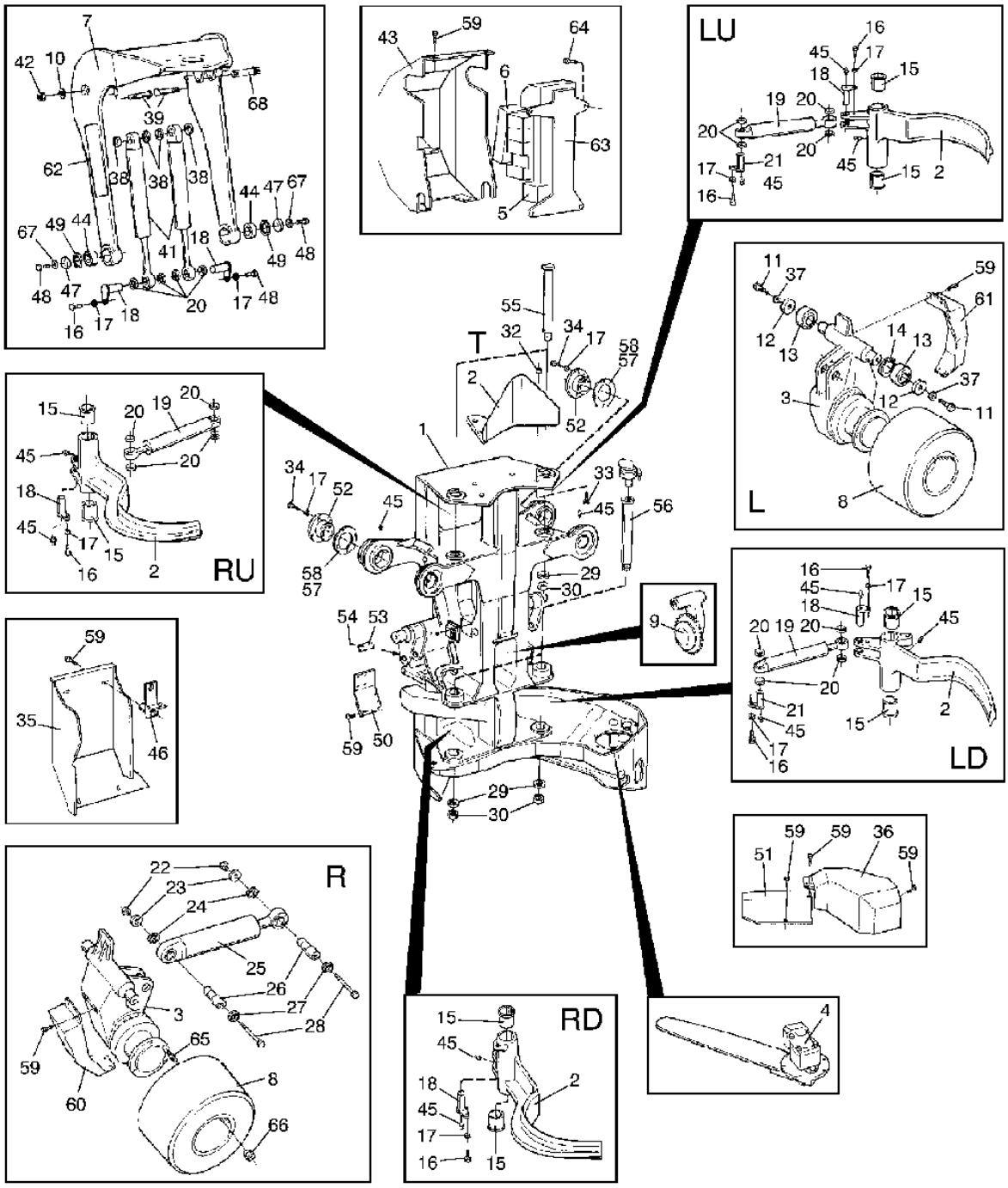

TF1419

THIS PARTS LISTING IS CONTINUED

HARVESTER HEAD MAIN PARTS

KEY	PART NO.	PART NAME	QTY	SERIAL NO.	REMARKS
38	F031177	SPACER	4		
39	F045157	PIN FASTENER	2		20 MM
	F601847	PIN FASTENER	2		30 MM
40	F013393	SOLID SHIM	AR		
41	F029982	CYLINDER	2	-1382	TILT CYLINDER. SEE PAGE 4465-2
	F062196	HYDRAULIC CYLINDER	2	1383-	TILT CYLINDER. SEE PAGE 4465-4
42	F031184	NUT	2		
43	F600624	CASE	1		STANDARD
	F618162	COVER	1		
44	F013894	BEARING	2		
45	F005626	FITTING	20		
46	F616964	BRACKET	1		(REPLACES F600871)
47	F049138	WASHER	2		
48	F003432	CAP SCREW	2		
49	F015955	SNAP RING	2		
50	F048147	PLATE	1		
51	F611519	PLATE	1		
52	F039571	LOCK	2		
53	.....	SERIAL NUMBER PLATE	1		SEE PAGE 4440-18
54	F021485	SCREW	2		
55	F017389	SHAFT	2		
56	F017387	SHAFT	2		
57	F039573	SOLID SHIM	2		
58	F039574	SOLID SHIM	2		
59	F005596	SCREW	13		
60	F041181	GUARD	1		
61	F041182	GUARD	2		
62	.....	DECAL KIT	1		SEE PAGE 4440-18
63	F045892	BRACKET	1		
64	F003541	SCREW	4		
	F003170	WASHER	4		
65	F049053	SCREW	12		
66	14M7237	NUT	12		(REPLACES F049054, F005568)
67	F002805	LOCK WASHER	2		
68	F601530	SHAFT	1		

CHAIN BRAKE COVER
FROM SERIAL NO. 1447-

WJTF3084 -UN-20NOV03

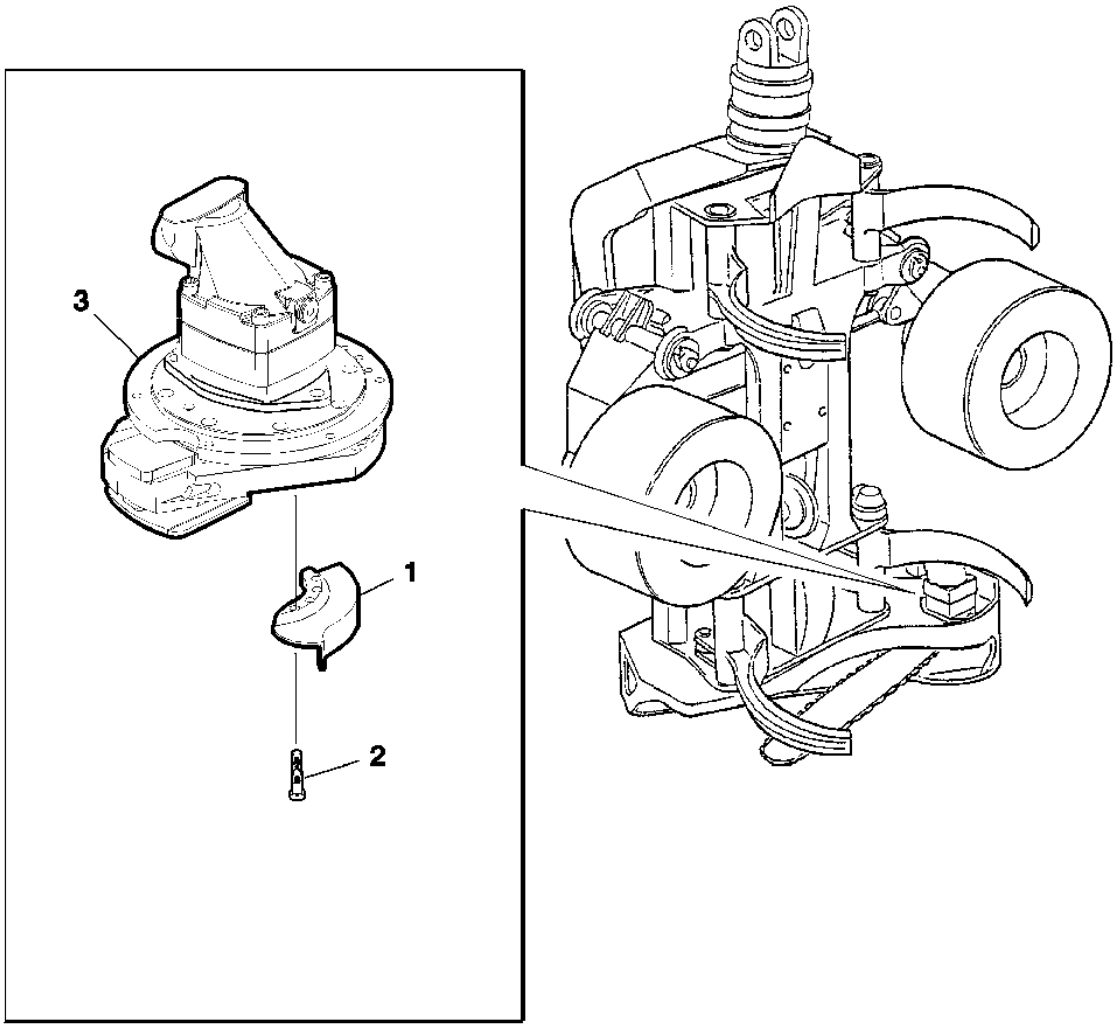

TF3084

THIS PARTS LISTING IS CONTINUED

B10

CHAIN BRAKE COVER
FROM SERIAL NO. 1447-

KEY	PART NO.	PART NAME	QTY	SERIAL NO.	REMARKS
1	F628260	COVER	1		
2	19M9337	SCREW	4		
3	.....	SAW UNIT	1		SEE PAGE 4440-4,6,9A,10

HARVESTER HEAD DECALS

WJTF2812 -UN-20JUN05

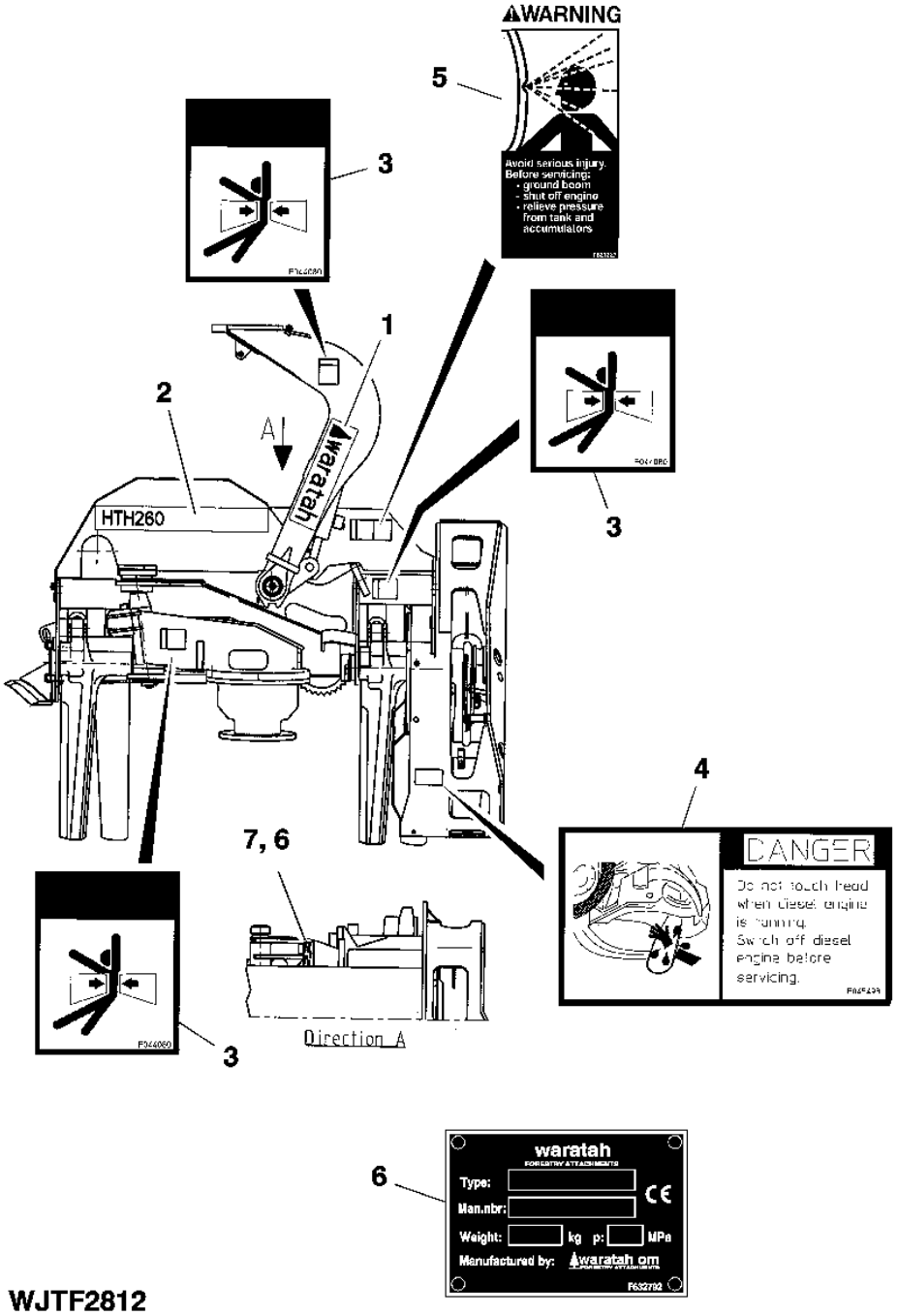

B12

HARVESTER HEAD DECALS

KEY	PART NO.	PART NAME	QTY	SERIAL NO.	REMARKS
1	F615477	TAPE	1		INCLUDING ITEM 1...5, 7
2	F613629	DECAL	2		
3	F044080	SIGN	6		
4	F045493	SIGN	1		
5	F036512	LABEL	2		
6	.....	SERIAL NUMBER PLATE	1		SEE PAGE 000I-2
7	F021485	SCREW	2		

ROTATOR AV12S, OPTION

WJTF2231 -UN-28APR04

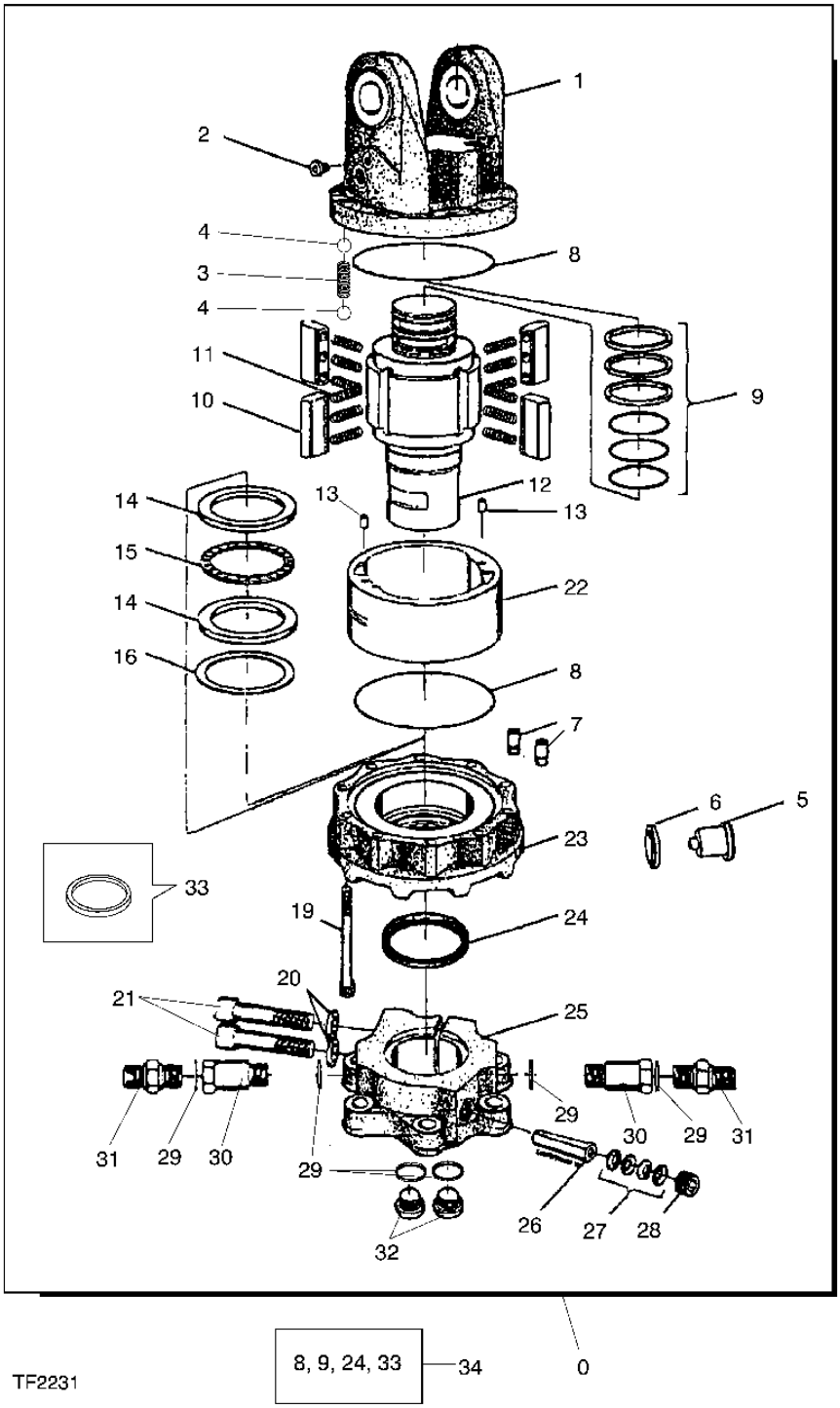

THIS PARTS LISTING IS CONTINUED

B14

ROTATOR AV12S, OPTION

KEY	PART NO.	PART NAME	QTY	SERIAL NO.	REMARKS
0	F054275	ROTATOR	1		ITEMS 1-33
1	F038853	YOKE	1		
2	F013637	PLUG	1		
3	F026266	SPRING	1		
4	F026258	BALL	2		
5	F054276	PLUG	1		
6	F054277	SEAL	1		
7	F054272	ORIFICE	2		
8	F026259	O-RING	2		
9	F022136	HYDR. CYLINDER ROD GUIDE	3		
10	F054273	VANE	4		
11	F015001	SPRING	12		
12	F054274	SHAFT	1		
13	F026265	PIN	2		
14	F026261	WASHER	2		
15	F015000	BEARING	1		
16	F014999	SHIM KIT	1		0.1/0.125/0.15/0.178
19	F015003	CAP SCREW	10		
20	F026264	WASHER	2		
21	F003451	CAP SCREW	2		
22	F054279	FRAME	1		
23	F054280	STATOR	1		
24	F026262	V-RING SEAL	1		
25	F023071	LINK	1		
26	F005621	WEDGE	1		
27	F005620	DISK SPRING	4		
28	F012558	SCREW	1		
29	F005170	SEAL	6		
30	F044886	FITTING	2		
31	F012507	FITTING	2		
32	F012556	PLUG	2		
33	F060264	SEAL	1		
34	F014998	SEAL KIT	1		INCLUDES ITEMS 9,12,24,33

ROTATOR AV14S, OPTION

WJTF2609 -UN-12NOV03

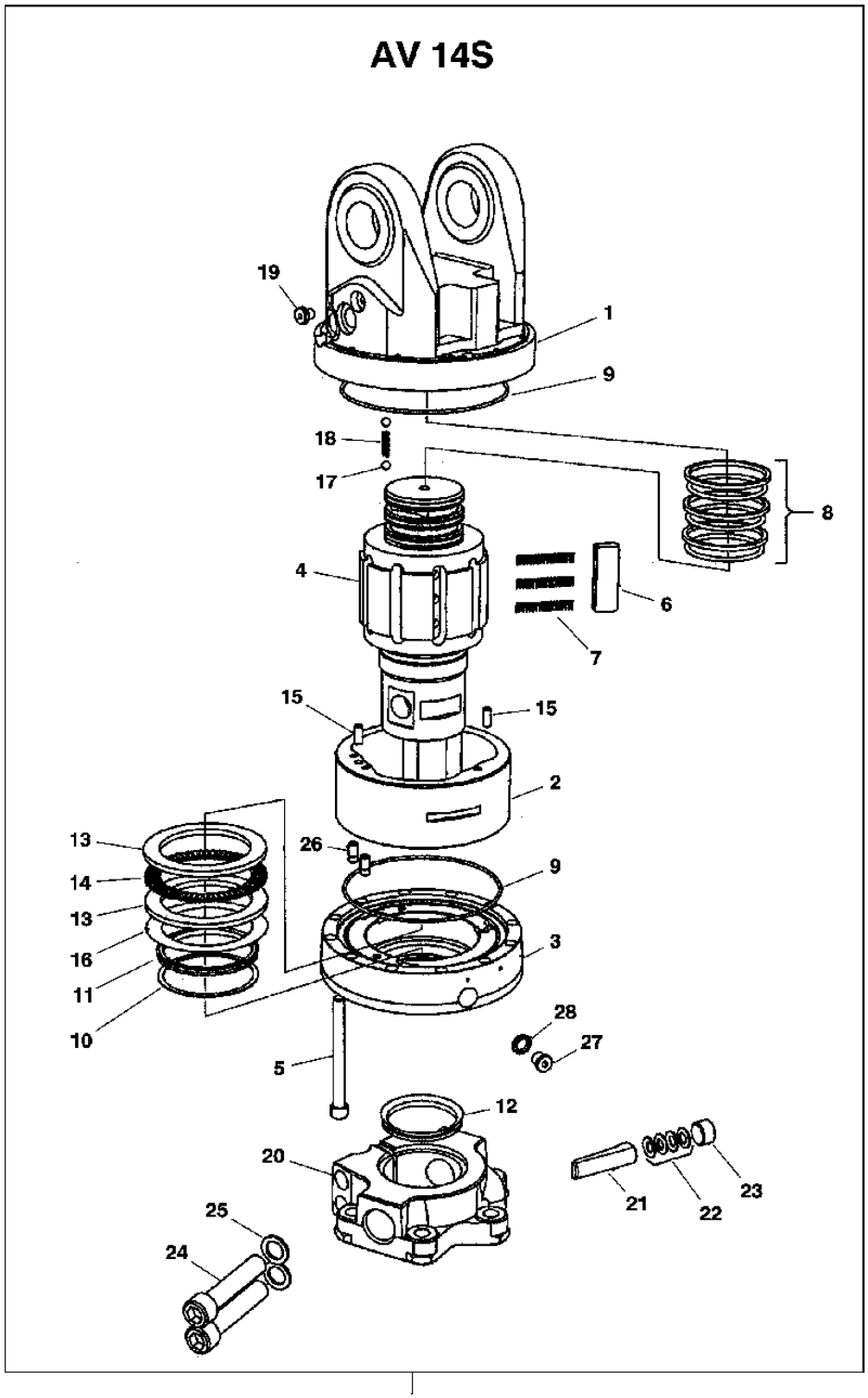

TF2609

THIS PARTS LISTING IS CONTINUED

B16

ROTATOR AV14S, OPTION

KEY	PART NO.	PART NAME	QTY	SERIAL NO.	REMARKS
0	F057704	ROTATOR	1		INCL ITEMS 1-28
	F014998	SEAL KIT	1		INCL ITEMS 8-12
1	F063426	STATOR	1		
2	F063427	FRAME	1		
3	F063428	STATOR	1		
4	F063429	SHAFT	1		
5	F015003	CAP SCREW	12		
6	F054273	VANE	9		
7	F015001	SPRING	27		
8	F022136	HYDR. CYLINDER ROD GUIDE	3		
9	F026259	O-RING	2		
10	F022149	BACK-UP RING	1		
11	F060264	SEAL	1		
12	F026262	V-RING SEAL	1		
13	F026261	WASHER	2		
14	F015000	BEARING	1		
15	F026265	PIN	4		
16	F014999	SHIM KIT	1		
	F012547	SHIM	1		0.100MM
	F012548	SHIM	1		0.125MM
	F012549	SHIM	1		0.150MM
	F012550	SHIM	1		0.178MM
17	F026258	BALL	2		
18	F026266	SPRING	1		
19	F013637	PLUG	1		
20	F023071	LINK	1		
21	F005621	WEDGE	1		
22	F005620	DISK SPRING	4		
23	F012558	SCREW	1		
24	F003451	CAP SCREW	2		
25	F026264	WASHER	2		
26	F063430	RESTRICTOR	2		
27	F054276	PLUG	1		
28	F054277	SEAL	1		

ROTATOR FASTEN BOLTS AND NUTS

WJTF3219 -UN-29JUN04

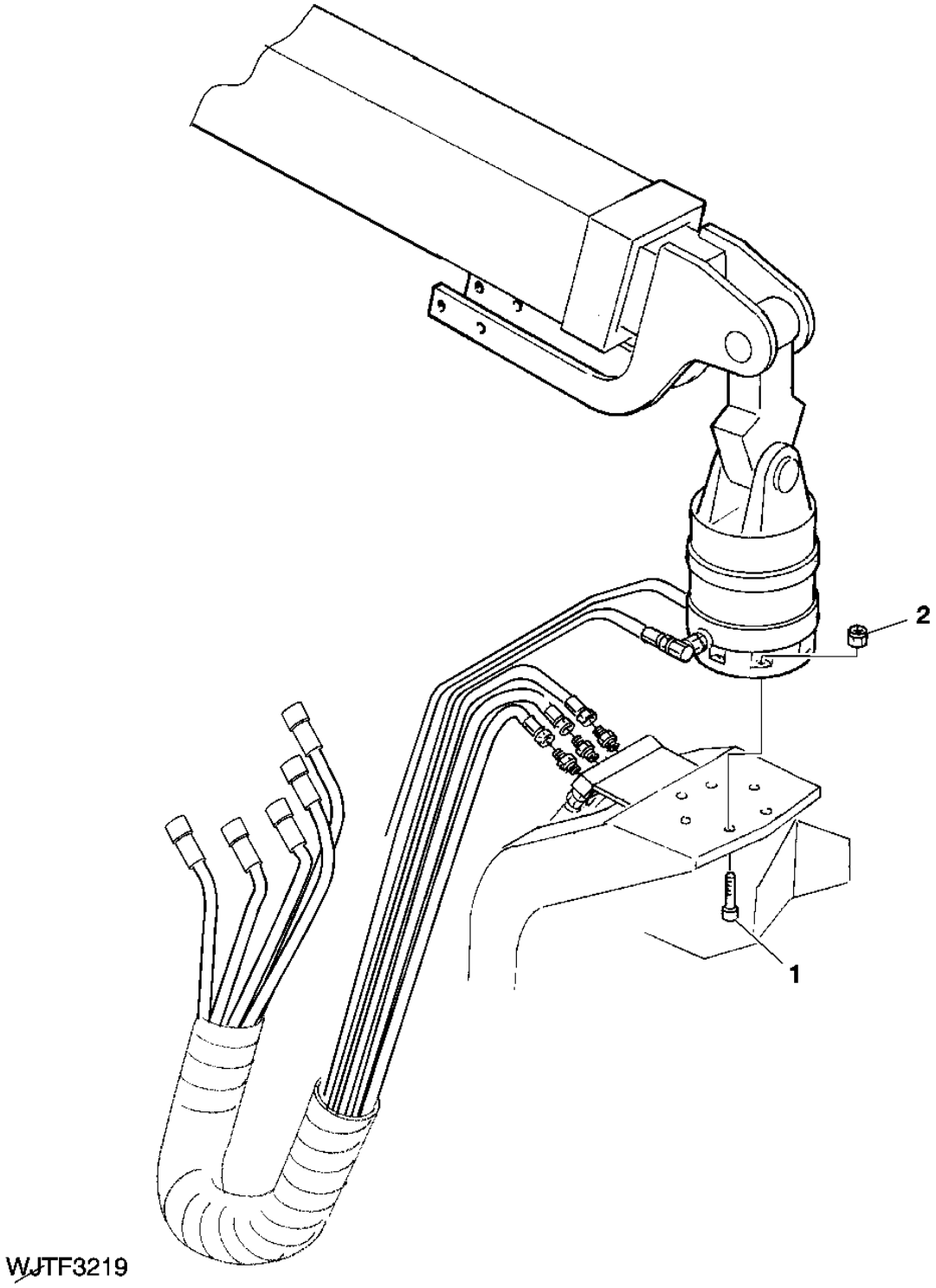

THIS PARTS LISTING IS CONTINUED

B18

ROTATOR FASTEN BOLTS AND NUTS

KEY	PART NO.	PART NAME	QTY	SERIAL NO.	REMARKS
1	F003443	SCREW	6		
2	F003592	LOCK NUT	6		

DOUBLE DAMP LINK, 100/100 MM, OPTION

WJTF1647 -UN-04FEB05

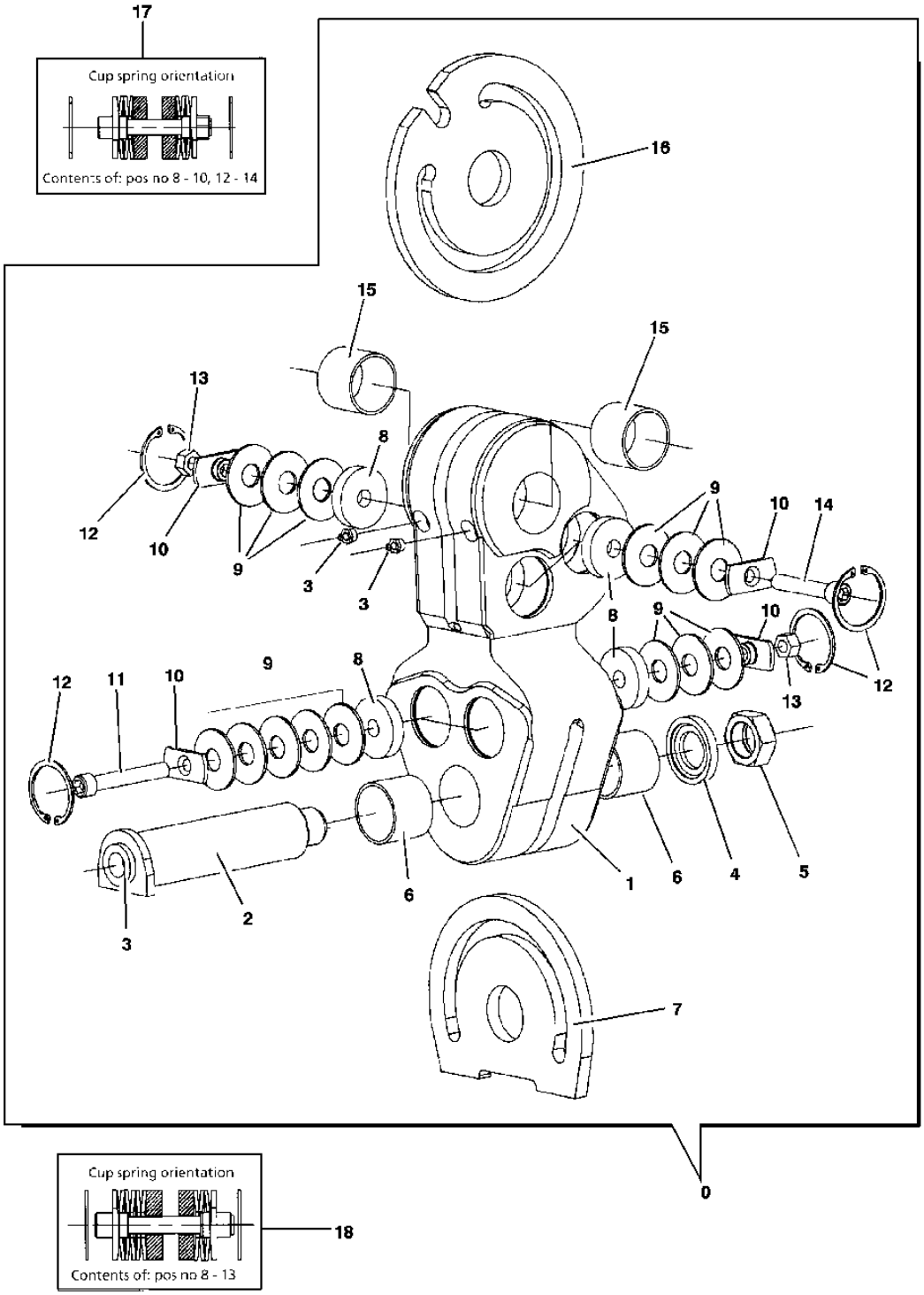

TF1647

DOUBLE DAMP LINK, 100/100 MM, OPTION

KEY	PART NO.	PART NAME	QTY	SERIAL NO.	REMARKS
0	F058756	LINK	1		ITEMS 1-16
1	F058757	LINK	1		
2	F005625	PIN FASTENER	1		
3	F003732	LUBRICATION FITTING	4		
4	F013014	WASHER	1		
5	F005615	NUT	1		
6	F058758	BUSHING	2		
7	F058740	BRAKE DISK	1		
8	F052872	LINING	8		
9	F054844	DISK SPRING	28		
10	F058746	NUT	8		
11	F058741	CAP SCREW	2		
12	F008452	SNAP RING	8		
13	F022059	LOCK NUT	4		
14	F058747	CAP SCREW	2		
15	F010668	BEARING	2		
16	F058759	BRAKE DISK	1		
17	F058749	BRAKE DISK	2		ITEMS 8-10,12-14
18	F058743	BRAKE DISK	2		ITEMS 8-13

B21

DOUBLE DAMP LINK, 80/100 MM, OPTION

WJT0923 -UN-13JAN05

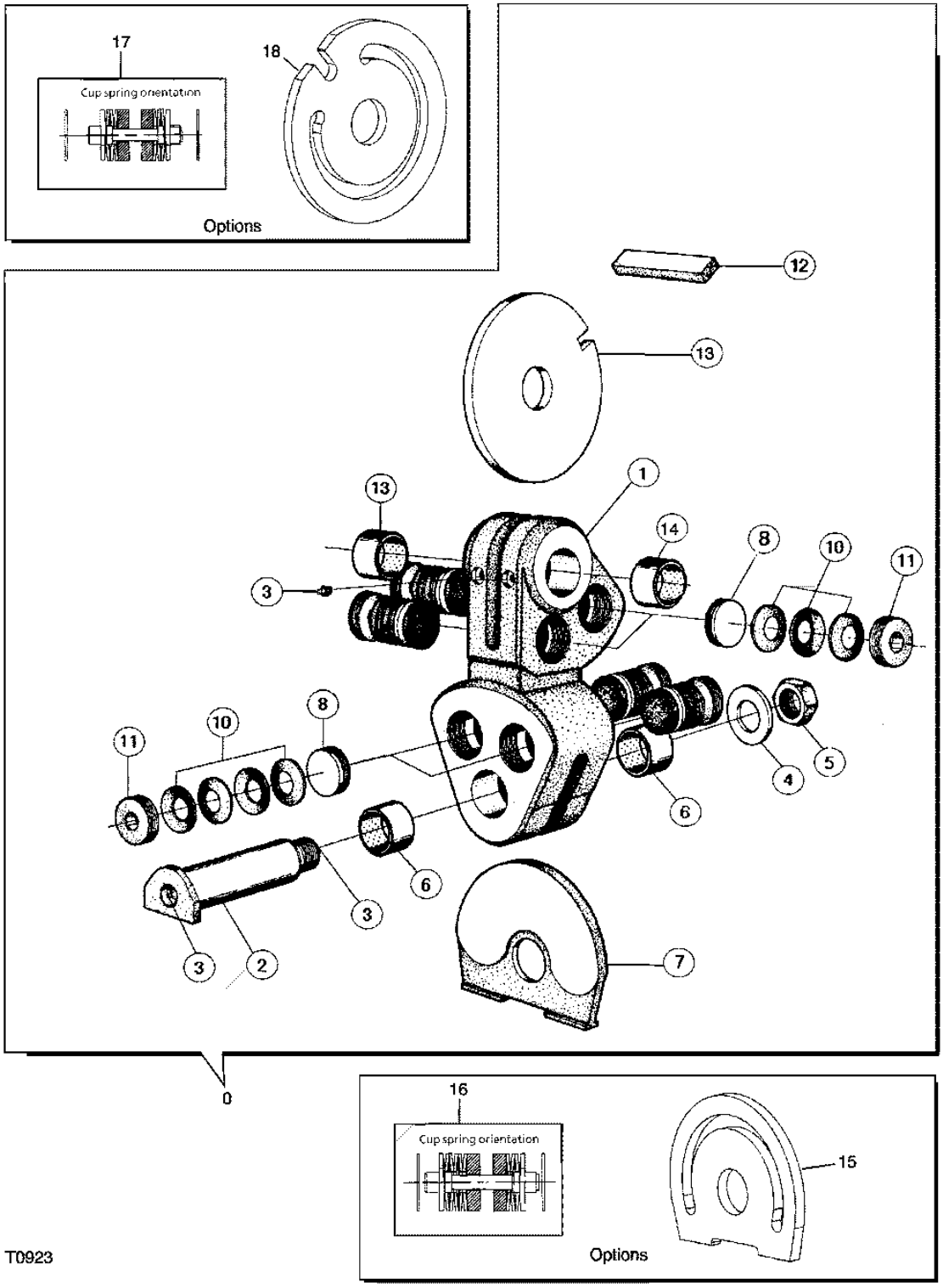

THIS PARTS LISTING IS CONTINUED

B22

DOUBLE DAMP LINK, 80/100 MM, OPTION

KEY	PART NO.	PART NAME	QTY	SERIAL NO.	REMARKS
0	F016459	LINK	1		INCLUDES ITEMS 1-14
1	.....	FRAME	1		
2	F005625	PIN FASTENER	1		INCLUDES ITEMS 3, 4
3	F003732	LUBRICATION FITTING	4		
4	F013014	WASHER	1		
5	F005615	NUT	1		
6	F010668	BEARING	2		
7	F020806	BRAKE DISK	1		
8	F052872	LINING	8		
10	F054844	DISK SPRING	12		
11	F020810	SET SCREW	8		
12	F020811	LOCKING COLLAR	1		
13	F020813	BRAKE DISK	1		
14	F018020	BEARING	2		
15	F058740	BRAKE DISK	1		OPTION
16	F058743	BRAKE DISK	2		OPTION
17	F058749	BRAKE DISK	2		OPTION
18	F058759	BRAKE DISK	1		OPTION

NO-DAMP LINK, 80/100 AND 100/100 MM, OPTION

WJT0621 -UN-03DEC03

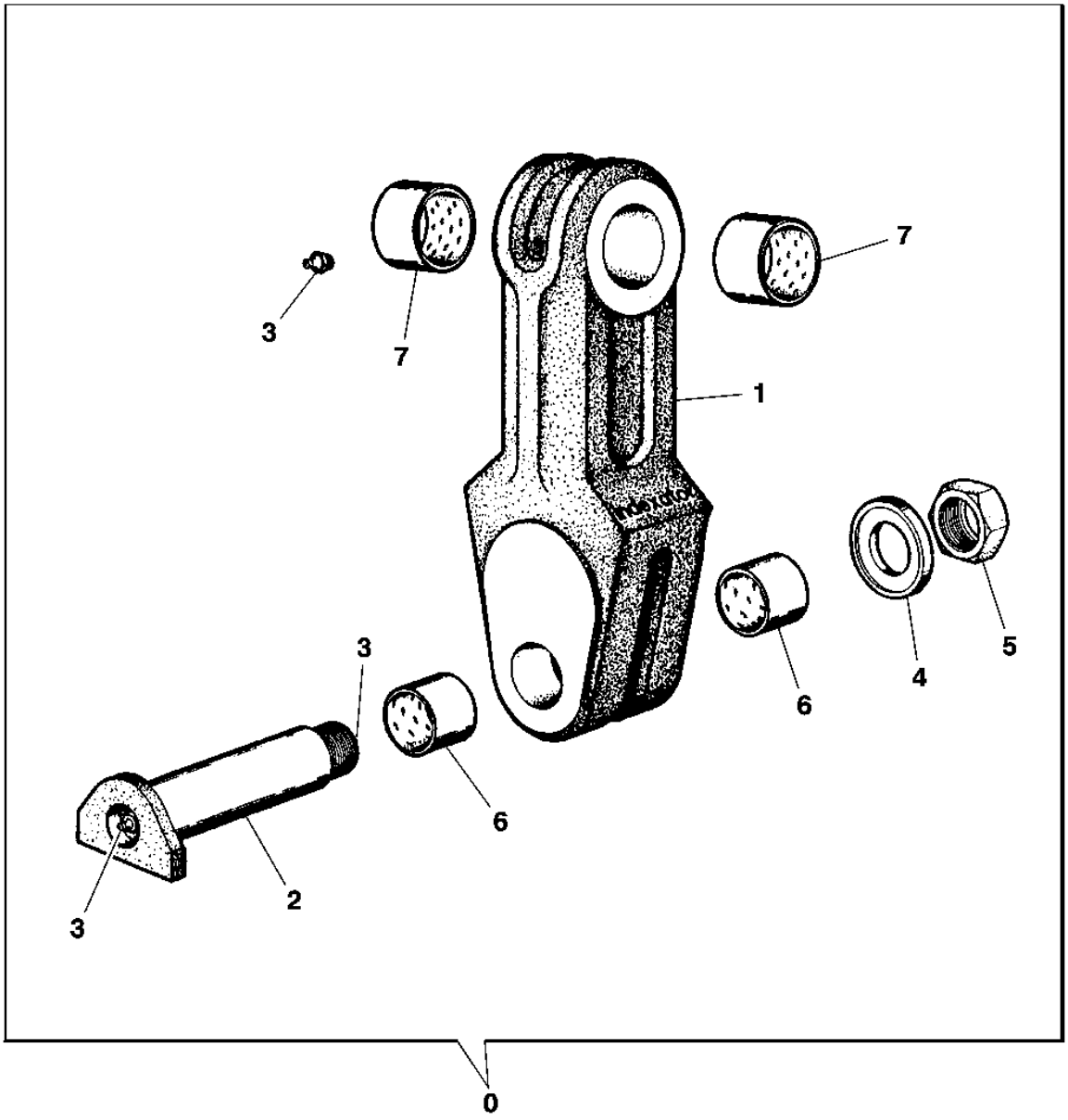

T0621

B24

NO-DAMP LINK, 80/100 AND 100/100 MM, OPTION

KEY	PART NO.	PART NAME	QTY	SERIAL NO.	REMARKS
0	F058750	LINK	1		80/100 MM, INCL. ITEM 1-6
	F058751	LINK	1		100/100 MM, INCL. ITEM 1-6
1	.....	LINK	1		
2	F005625	PIN FASTENER	1		INCL. ITEM 3,4
3	F003732	LUBRICATION FITTING	3		80/100 MM
	F003732	LUBRICATION FITTING	4		100/100 MM
4	F013014	WASHER	1		
5	F005615	NUT	1		
6	F010872	BUSHING	2		
7	F010668	BEARING	2		80/100 MM
	F010872	BUSHING	2		100/100 MM

TOOL, KNOCK-OUT, OPTION

WJTF3072 -UN-11NOV03

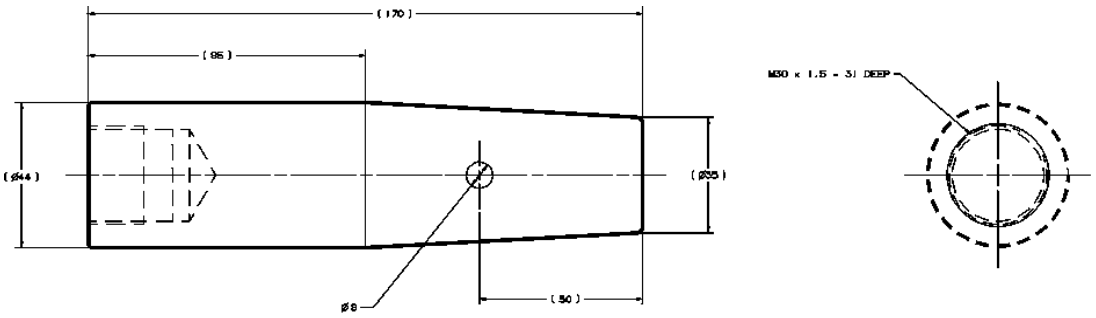

TF3072

THIS PARTS LISTING IS CONTINUED

C2

TOOL, KNOCK-OUT, OPTION

KEY	PART NO.	PART NAME	QTY	SERIAL NO.	REMARKS
1	F120271	TOOL	1		

FEED WHEEL, MOUNTING ARM AND HYDRAULIC DRIVE MOTOR

WJTF1041 -UN-16JUN05

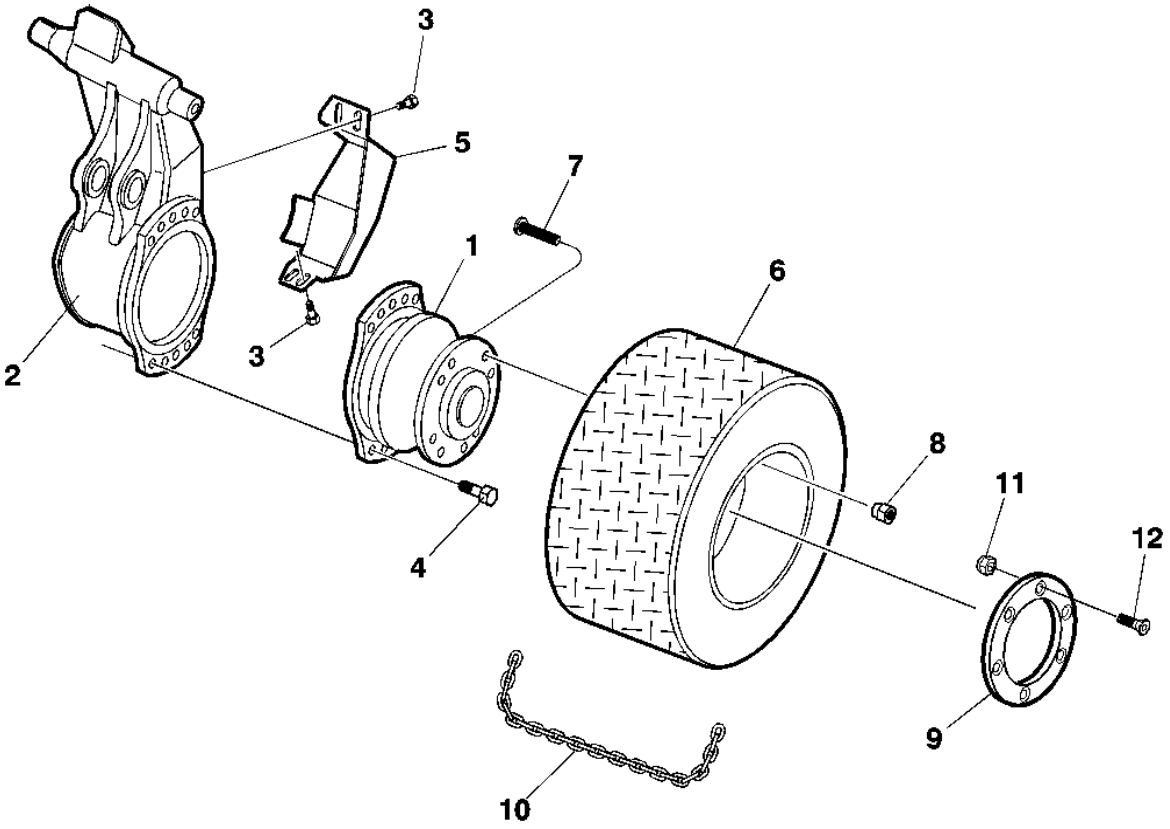

WJTF1041

THIS PARTS LISTING IS CONTINUED

FEED WHEEL, MOUNTING ARM AND HYDRAULI DRIVE MOTOR

KEY	PART NO.	PART NAME	QTY	SERIAL NO.	REMARKS
1	F055829	HOUSING	2		934 CC, SEE PAGE 4460-4
	F056832	HYDRAULIC MOTOR	2		857 CC, SEE PAGE 4460-4
2	F034274	ARM	1		RIGHT
	F034273	ARM	1		LEFT
3	F040644	SCREW	8		
4	F026120	SCREW	20		LOCTITE 243
5	F041181	GUARD	1		RIGHT
	F041182	GUARD	1		LEFT
6	F022484	WHEEL	2		TIRECO RUBBER
	F011178	WHEEL	2		STEEL WHEEL
	F063265	ROLL	1		MENSE, STEEL, LEFT
	F063266	ROLL	1		MENSE, STEEL, RIGHT
	F063263	ROLL	1		MENSE, RUBBER, LEFT
	F063264	ROLL	1		MENSE, RUBBER, RIGHT
7	F049053	SCREW	12		
8	14M7237	NUT	12		(REPLACES F049054, F005568)
9	F069121	PLATE	4		ONLY FOR TIRECO WHEELS
10	F069118	CHAIN LINK	42		28 LINKS, ONLY FOR TIRECO WHEELS
11	F003588	LOCK NUT	12		ONLY FOR TIRECO WHEELS
12	19M9588	CAP SCREW	12		M10 X 60, ONLY FOR TIRECO WHEELS
..	F033710	ADHESIVE	AR		LOCTITE 243, 50 ML

CUTTING SAW HYDRAULIC DRIVE MOTOR

WJT0383 -UN-01JUN01

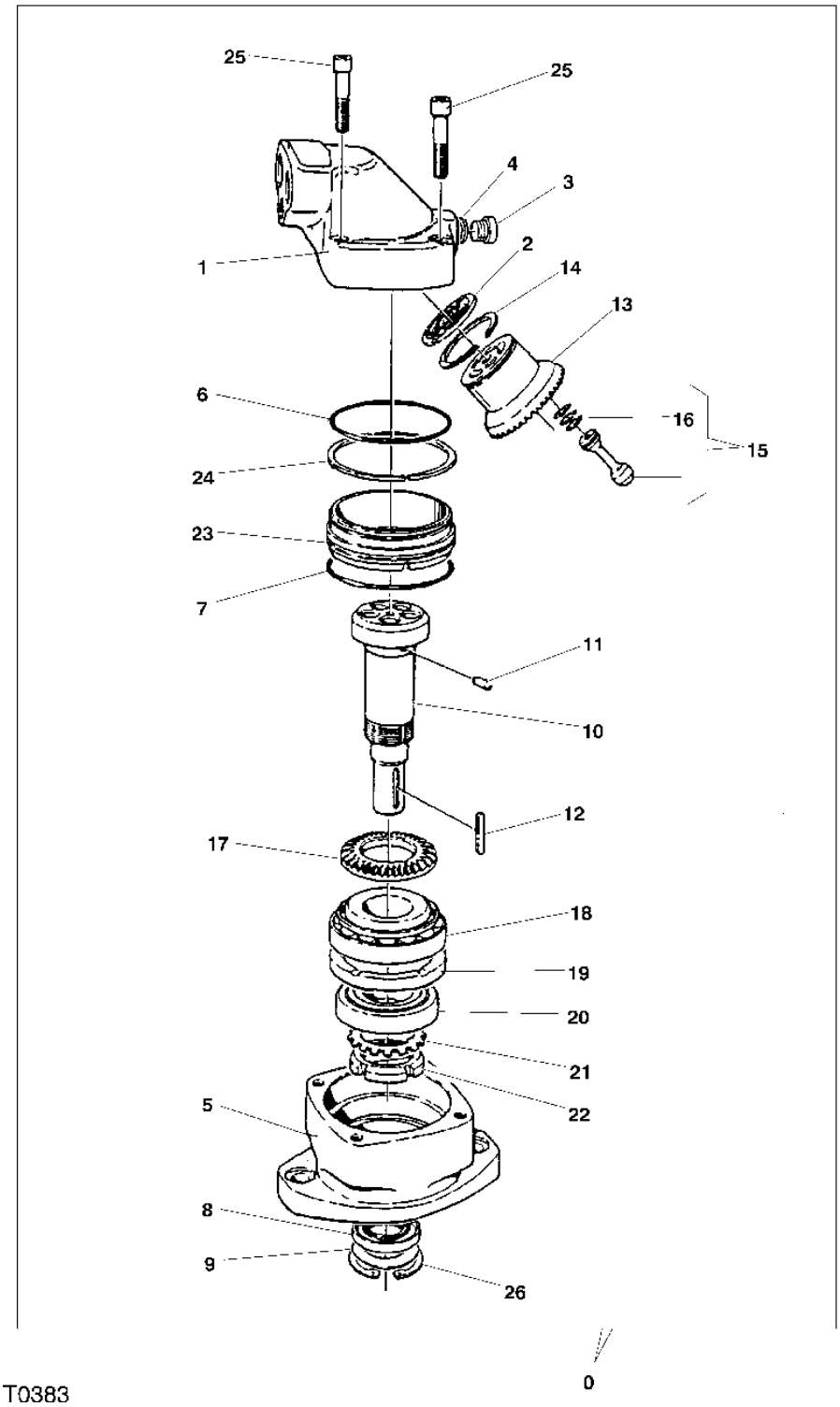

CUTTING SAW HYDRAULIC DRIVE MOTOR

KEY	PART NO.	PART NAME	QTY	SERIAL NO.	REMARKS
0	F005473	HYDRAULIC MOTOR	1	-XXX	
	F066799	HYDRAULIC MOTOR	1	XXX-	
1	F035010	HOUSING	1		
2	F035011	PLATE	1	-XXX	
	F057831	DISK	1	XXX-	FOR F066799, (BI-METAL)
3	F003383	PLUG	1		
4	F005166	SEAL	1		
5	F035012	HOUSING	1		
6	F003228	O-RING	1		
7	F003229	O-RING	1		
8	F003230	SEAL	1		
9	F035014	BACK-UP RING	1		
10	F035015	SHAFT	1		INCL. ITEM 11
11	.....	PIN	1		
12	F035017	WEDGE	1		
13	F035018	CYLINDER	1		
14	F035019	SNAP RING	1		
15	F035020	PISTON	1		
16	F035021	PISTON RING	15		
17	F035022	RING	1		
18	F022721	ROLLER BEARING	1		
19	F035024	SPACER	1		
20	F035025	BEARING	1		
21	F003828	LOCK WASHER	1		
22	F003833	LOCK NUT	1		
23	F035026	SPACER	1		
24	F035027	SOLID SHIM	AR		2,25
	F035028	SHIM	AR		2,375
	F035029	SHIM	AR		2,50
	F035030	SOLID SHIM	AR		2,625
	F035031	SOLID SHIM	AR		2,75
	F035032	SOLID SHIM	AR		2,875
	F035033	SOLID SHIM	AR		3,00
25	F003421	SCREW	4		
26	F003372	SNAP RING	1		
27	F003230	SEAL	1		

HYDRAULIC MOTOR 857 CC AND 934 CC FEED ROLLS

WJTF1426 -UN-01JUN01

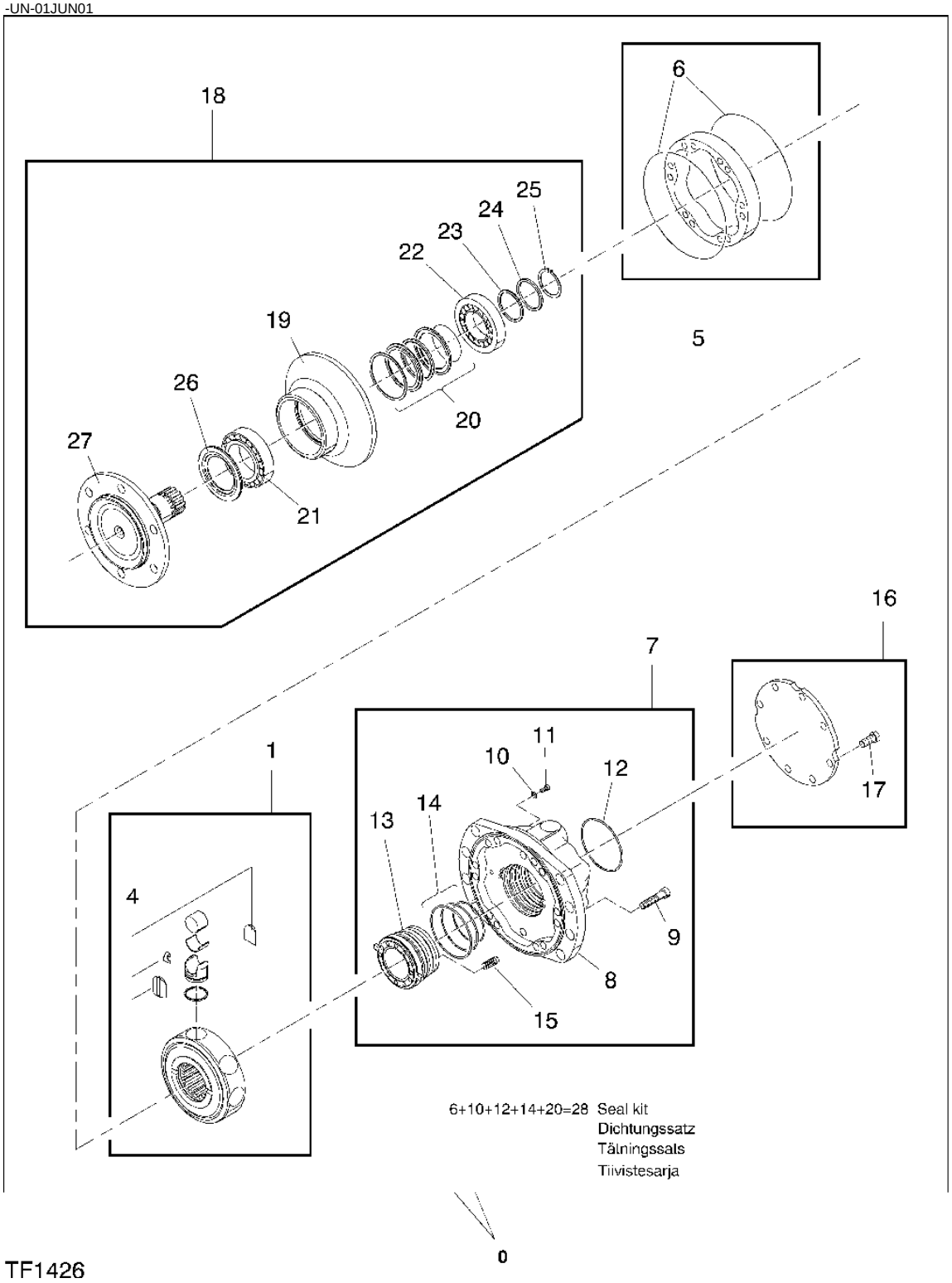

TF1426

HYDRAULIC MOTOR 857 CC AND 934 CC FEED ROLLS

KEY	PART NO.	PART NAME	QTY	SERIAL NO.	REMARKS
0	F055829	HOUSING	1		934 CC. INCL.POS. 1-28
	F056832	HYDRAULIC MOTOR	1		857 CC. INCL.POS. 1-28
1	F049025	CYLINDER BLOCK	1		INCL.POS. 4
4	F049028	KIT	1		
5	F056141	CAM	1		934 CC. INCL.POS. 6
	F056918	CAM	1		857 CC. INCL.POS. 6
6	.....	O-RING	2		
7	F056840	COVER	1		INCL.POS. 8-15
8	F049032	COVER	1		
9	F056841	SCREW	16		
10	.....	GASKET	2		
11	F049035	SCREW	2		
12	.....	O-RING	1		
13	F049037	IGNITION DISTRIBUTOR	1		
14	F049038	SEAL KIT	1		
15	F049039	SPRING	8		
16	F049040	PLATE	1		INCL.POS.17
17	F056843	SCREW	8		
18	F049042	BEARING	1		INCL.POS.19-27
19	F049043	BEARING	1		
20	F049044	SEAL KIT	1		
21	F049045	BEARING	1		
22	F049046	BEARING	1		
23	F049047	SOLID SHIM	1		
24	F049048	RING	1		
25	F049049	RING	1		
26	F049050	SEAL	1		
27	F049051	SHAFT	1		
28	F049052	SEAL KIT	1		INCL.POS.6,10,12,14,20

CUTTING SAW OIL PUMP

WJT0339 -UN-24JAN02

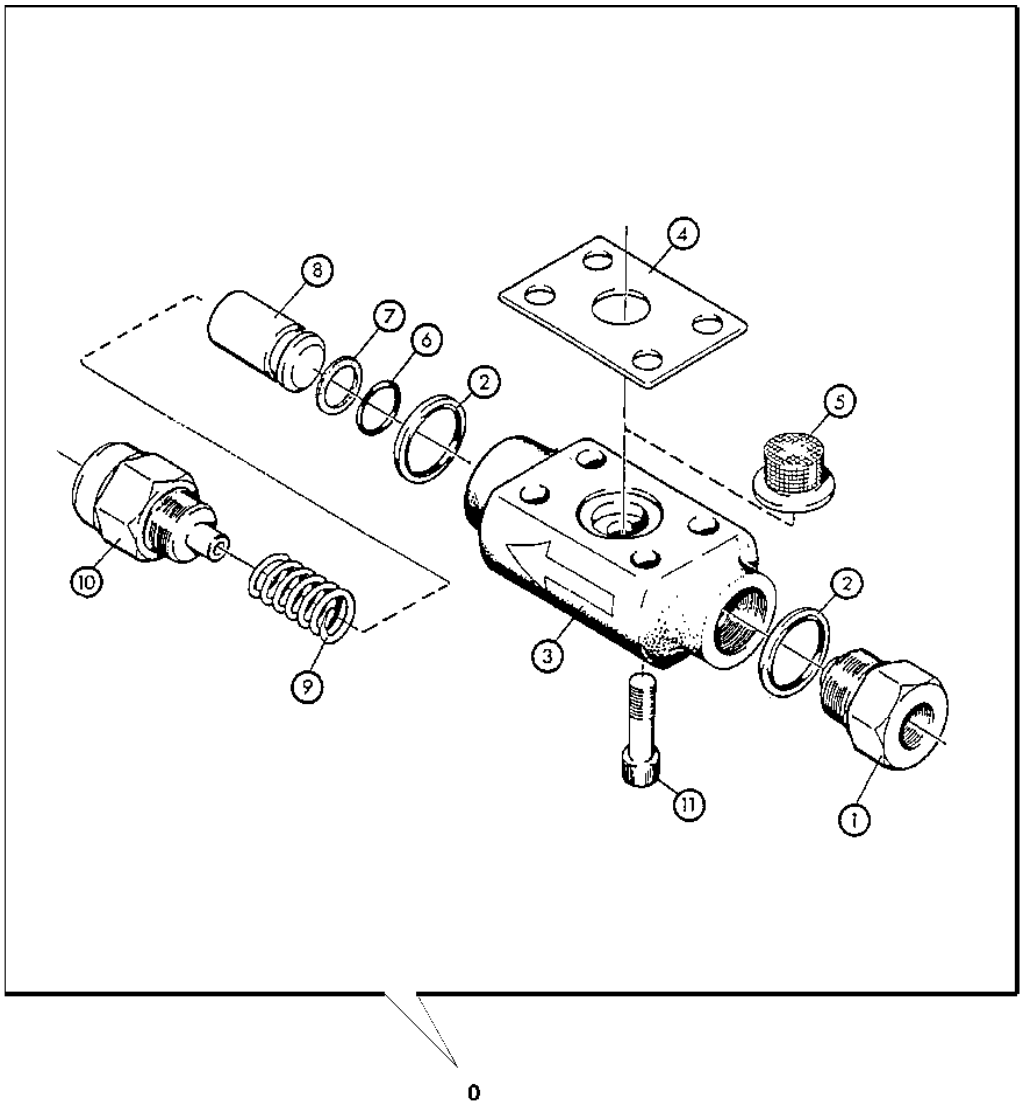

T0339

THIS PARTS LISTING IS CONTINUED

CUTTING SAW OIL PUMP

KEY	PART NO.	PART NAME	QTY	SERIAL NO.	REMARKS
0	F030032	OIL PUMP	1		INCL. 1-11
	F012865	SEAL KIT	1		
1	F008352	UNION FITTING	1		
2	F005166	SEAL	2		
3	F008353	HOUSING	1		
4	F008354	GASKET	1		
5	F008355	STRAINER	1		
6	F010686	O-RING	1		
7	F010687	SUPPORT	1		
8	F008356	PISTON	1		
9	F010688	SPRING	1		
10	F034836	UNION FITTING	1		
11	F010685	CAP SCREW	4		

PAINT MARKING SYSTEM RESERVOIR,HOSES AND KNIFE

WJTF2196 -UN-01JUN01

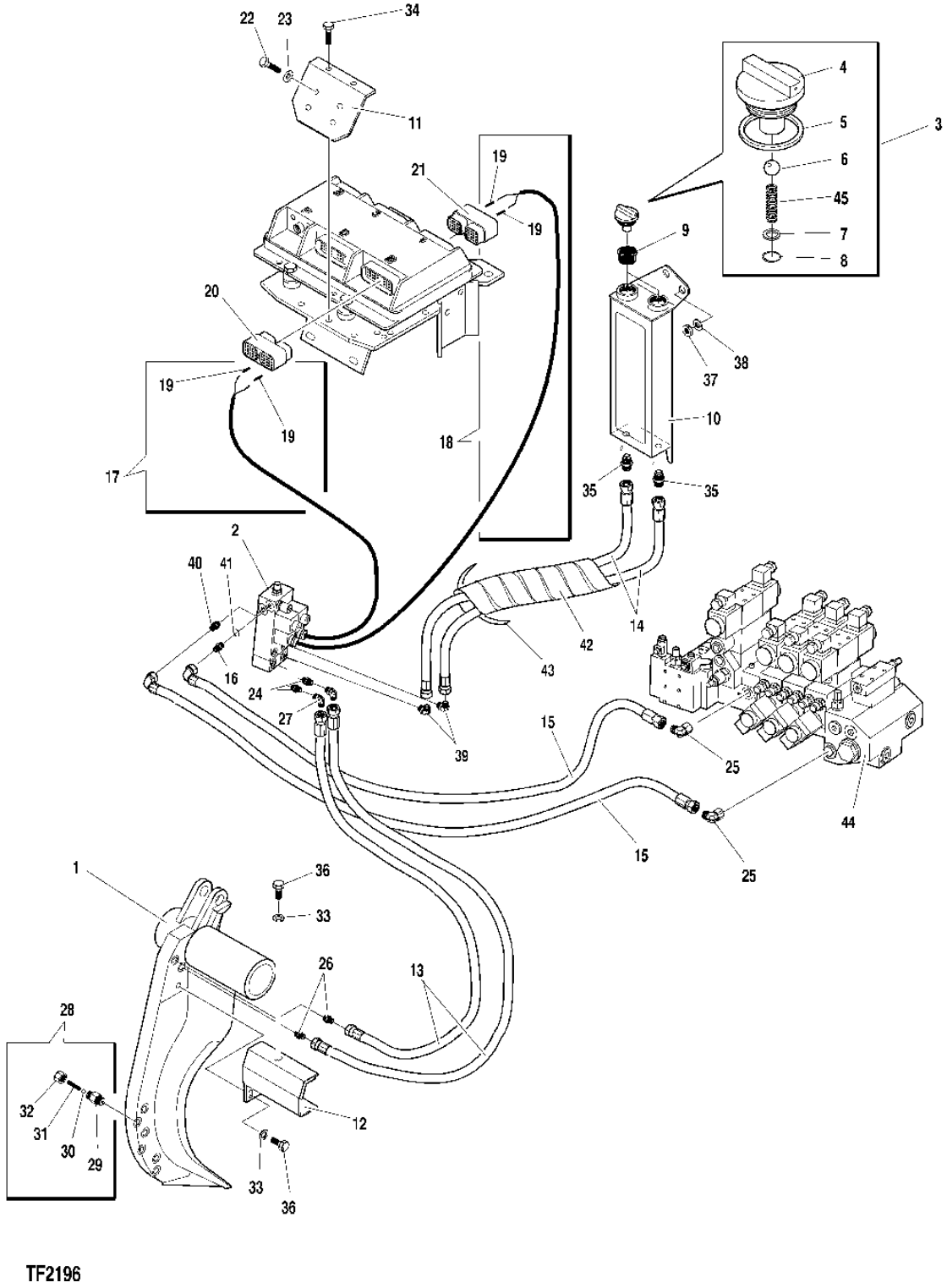

THIS PARTS LISTING IS CONTINUED

PAINT MARKING SYSTEM RESERVOIR,HOSES AND KNIFE

KEY	PART NO.	PART NAME	QTY	SERIAL NO.	REMARKS
1	F048194	STATIONARY KNIFE	1		
2	F046538	KIT	1		
3	F021332	CAP	2		INCL. POS. 4-8
4	F021333	CAP	1		
5	F022656	SEAL	1		
6	F012623	BALL	1		
7	F010721	WASHER	1		
8	F012625	SNAP RING	1		
9	F014081	FILTER	2		
10	F601992	TANK	1		
11	F604393	PLATE	1		
12	F019187	BAR	1		
13	F023713	HYDRAULIC HOSE - FABRICATE	2		
14	F043524	HYDRAULIC HOSE - FABRICATE	2		
15	F046801	HYDRAULIC HOSE - FABRICATE	2		
16	F013167	FITTING	1		
17	F604481	CABLE	1		INCL. POS. 19
18	F604479	CABLE	1		INCL. POS. 19 TJ 3000
19	F055290	SOCKET	4		
20	F055285	ELECTRICAL CONNECTOR ASSY	1		
21	F055284	ELECTRICAL CONNECTOR ASSY	1		
22	F003524	SCREW	4		
23	F008262	LOCK WASHER	4		
24	F005052	FITTING	2		
25	F022417	ELBOW FITTING	2		
26	F005053	FITTING	2		
27	F005044	ELBOW FITTING	2		
28	F604190	NOZZLE	6		INCL.POS. 29-32
29	F604191	HOUSING	1		
30	F013607	BALL	1		
31	F056380	SPRING	1		
32	F045206	NOZZLE	1		
33	F005551	LOCK WASHER	4		
34	F003524	SCREW	2		
35	F005055	FITTING	2		
36	F003531	SCREW	4		
37	F019245	LOCK NUT	1		
38	F007748	WASHER	1		
39	F024599	ELBOW FITTING	2		
40	F005057	FITTING	1		
41	F005164	SEALING WASHER	1		
42	F031276	GUARD	1		
43	F005334	TIE BAND	1		
44	.....	PUMP/VALVE CONTROLLER	1		SEE PAGE 4462-2
45	F012624	SPRING	1		

PAINT MARKING SYSTEM PUMP

WJTF2213 -UN-04SEP02

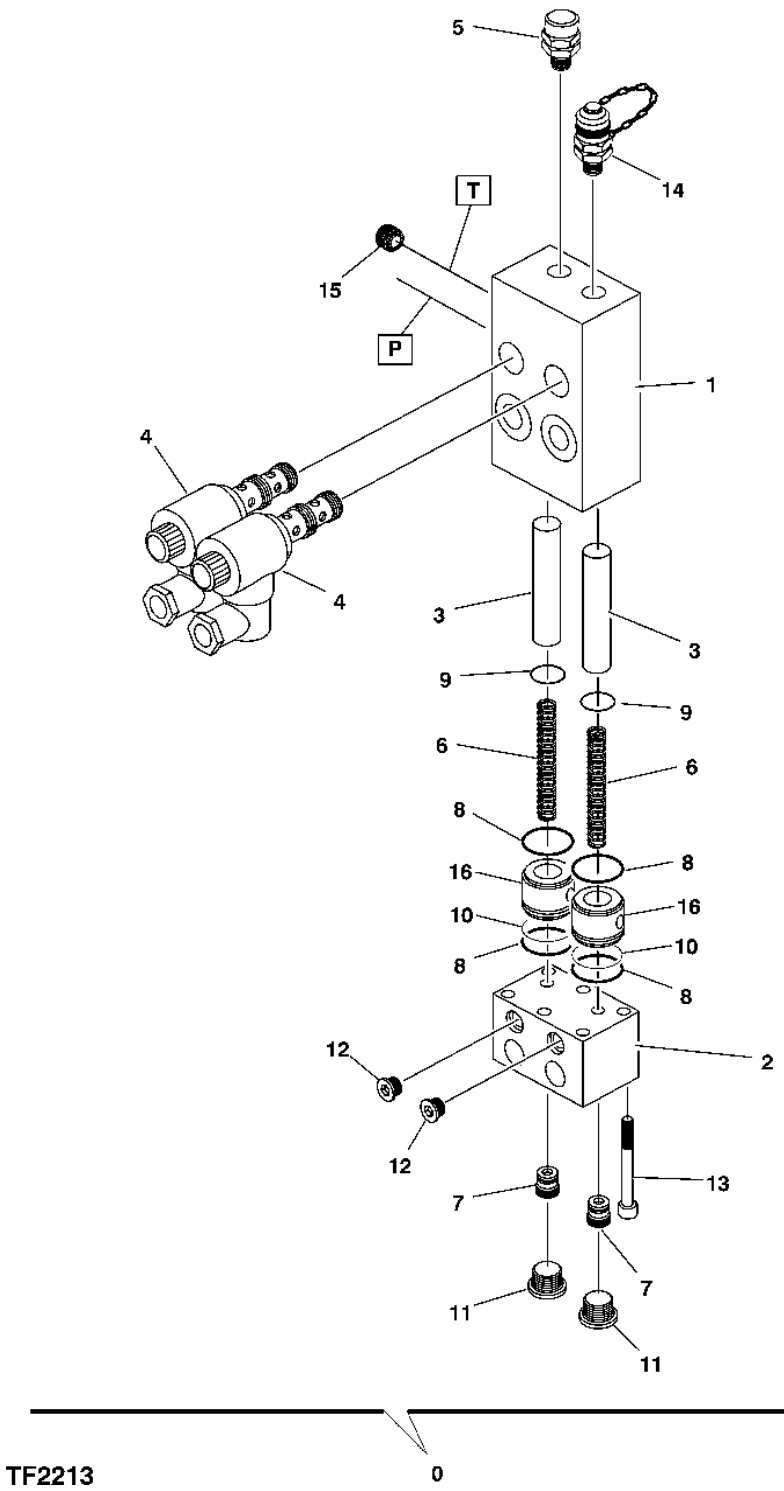

TF2213

THIS PARTS LISTING IS CONTINUED

C14

PAINT MARKING SYSTEM PUMP

KEY	PART NO.	PART NAME	QTY	SERIAL NO.	REMARKS
0	F061482	PROCESS PUMP	1		INCL. ITEMS 1-16
1	F060756	FRAME	1		(REPLACES F061485)
2	F061335	COVER	1		
3	F062022	PISTON	2		
4	F048437	SOLENOID HYDRAULIC VALVE	2		
	F028789	SOLENOID	2		
5	F021684	HYDRAULIC PRESSURE VALVE	1		
	F021587	SEAL KIT	1		
6	F021685	SPRING	2		
7	F059996	CHECK VALVE	2		
8	F008449	O-RING	4		
9	F060758	O-RING	2		
10	F060759	O-RING	2		
11	F018111	PLUG	2		
12	F057843	PLUG	2		
13	F016303	SCREW	6		
14	F057716	FITTING	1		
15	F008631	VALVE	1		
16	F065971	KIT	2		

SAW VALVE BLOCK

WJTF1249 -UN-04JUL02

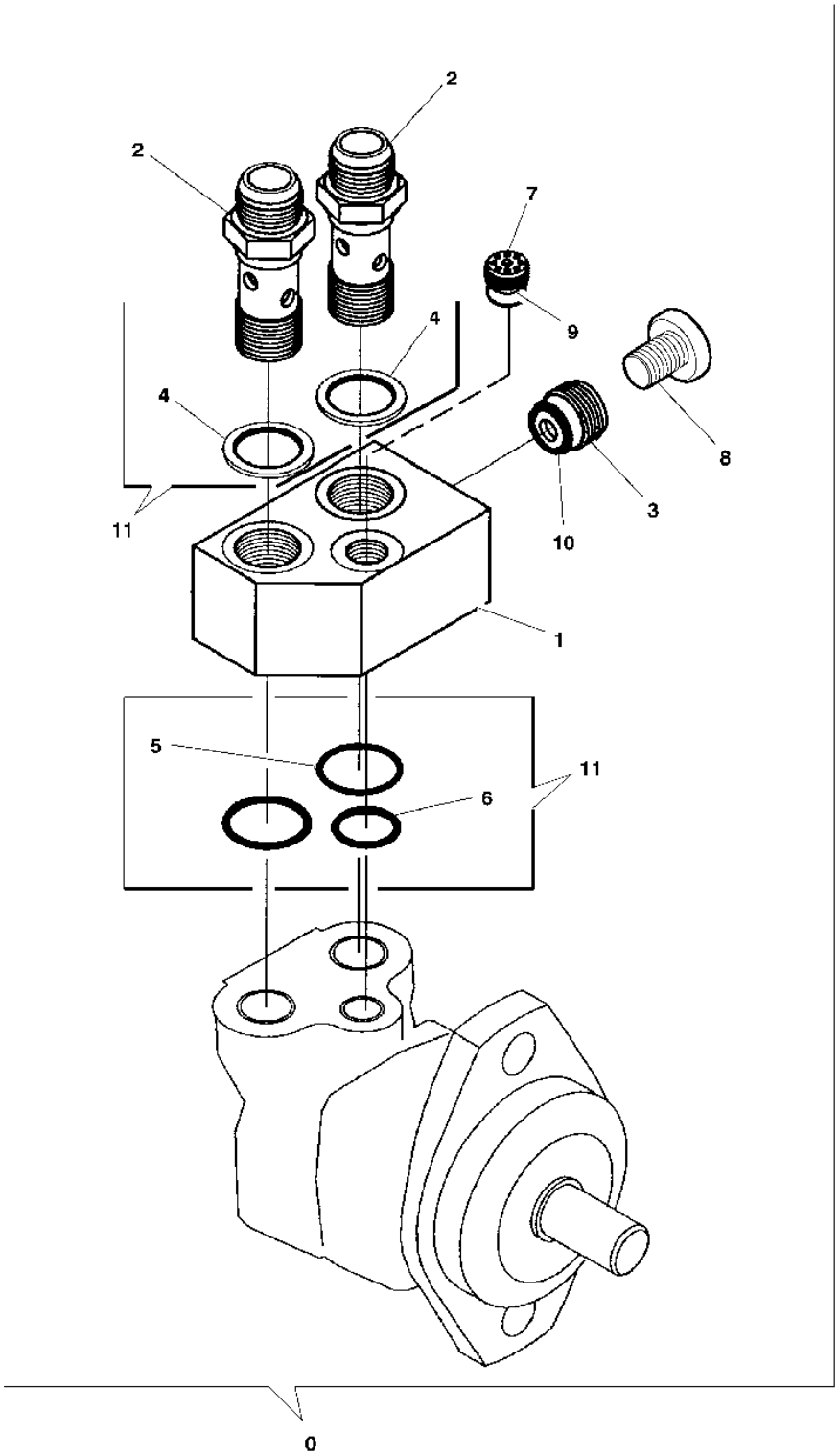

TF1249

THIS PARTS LISTING IS CONTINUED

C16

SAW VALVE BLOCK

KEY	PART NO.	PART NAME	QTY	SERIAL NO.	REMARKS
0	F031950	HOUSING	1		
1	F047910	MANIFOLD	1		
2	F035434	HOLLOW SCREW	2		JIC 3/4"
	F047912	SCREW	2		R 3/4"
3	F018836	CHECK VALVE	1		
4	F005170	SEAL	2		
5	F047913	O-RING	2		
6	F025702	O-RING	1		
7	F008653	VALVE	1		
8	F018067	PLUG	1		
9	F008448	O-RING	1		
10	F046505	O-RING	1		
11	F021627	SEAL KIT	1		INCL. POS. 4, 5, 6

CUTTING SAW HYDRAULIC HOSES

WJTF2199 -UN-02FEB04

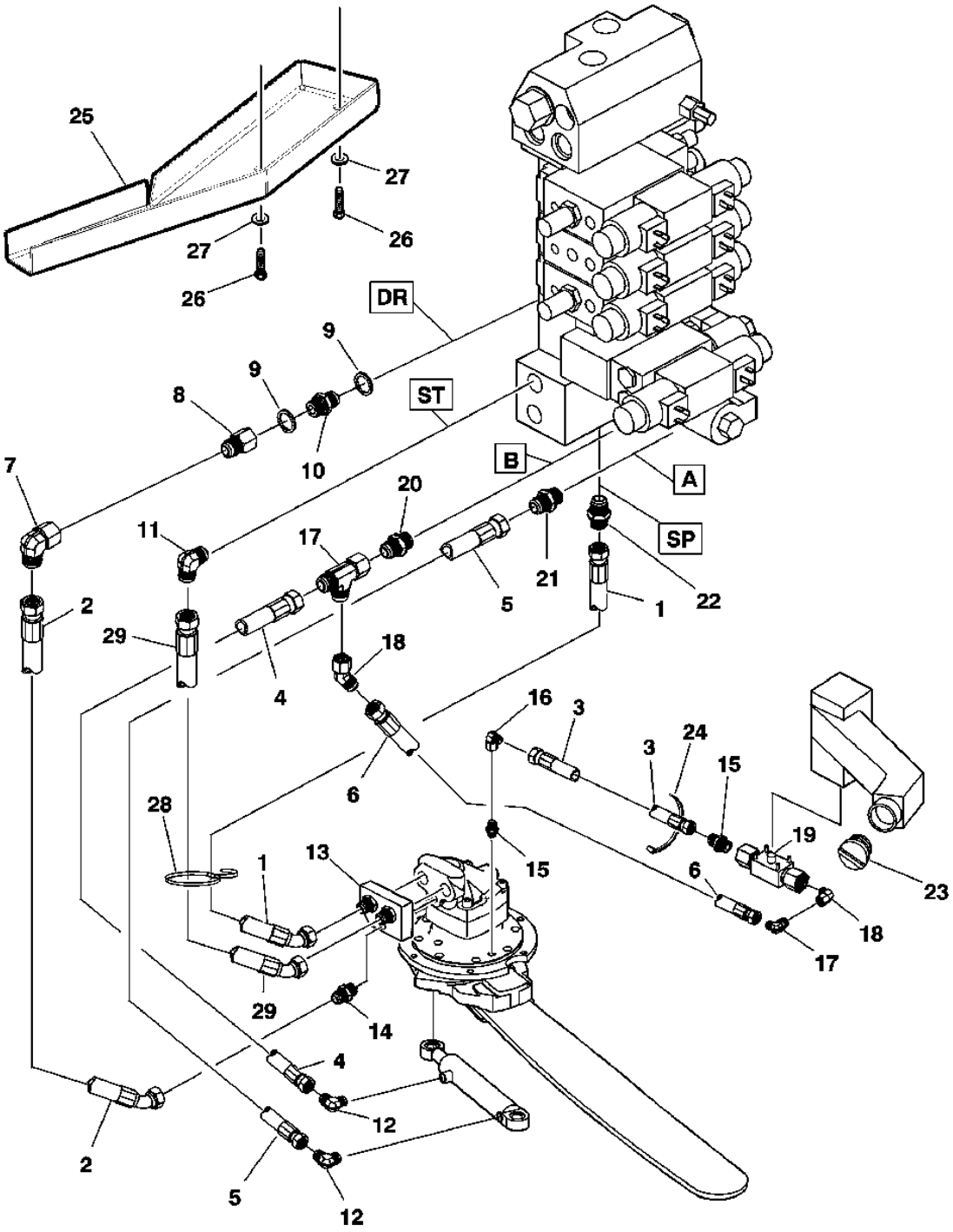

TF2199

THIS PARTS LISTING IS CONTINUED

CUTTING SAW HYDRAULIC HOSES

KEY	PART NO.	PART NAME	QTY	SERIAL NO.	REMARKS
1	F065014	HYDRAULIC HOSE - FABRICATE	1		STANDARD
	F065019	HYDRAULIC HOSE - FABRICATE	1		HD
2	F056957	HYDRAULIC HOSE - FABRICATE	1		
3	F049020	HYDRAULIC HOSE - FABRICATE	1		
4	F057849	HYDRAULIC HOSE	1		
5	F057850	HYDRAULIC HOSE	1		
6	F049021	HYDRAULIC HOSE - FABRICATE	1		
7	F005045	ELBOW FITTING	1		
8	F011485	FITTING	1		
9	F005167	SEALING TRIM	2		
10	F004357	FITTING	1		
11	F005049	ELBOW FITTING	1		
12	F024402	ELBOW FITTING	2		
13	.....	CHOCK BLOCK	1		SEE PAGE 4460-12
14	F005060	FITTING	1		
15	F005057	FITTING	1		
16	F022417	ELBOW FITTING	1		
17	F023535	TEE FITTING	1		
18	F013594	ELBOW FITTING	1		
19	.....	PUMP	1		SEE PAGE 4460-6
20	F005055	FITTING	1		
21	F052530	THREADED NIPPLE	1		
22	F005063	FITTING	1		
23	F021332	CAP	1		
24	F005334	TIE BAND	5		
25	F048128	CASE	1		
26	F040644	SCREW	10		
27	F002805	LOCK WASHER	10		
28	F011353	STRAP WITH BUCKLE	4		
29	F065015	HYDRAULIC HOSE - FABRICATE	1		

FLUSHING HOSE FOR SAW MOTOR
FROM SERIAL NO. EJ0762C001613

WJTF3386 -UN-14JUN05

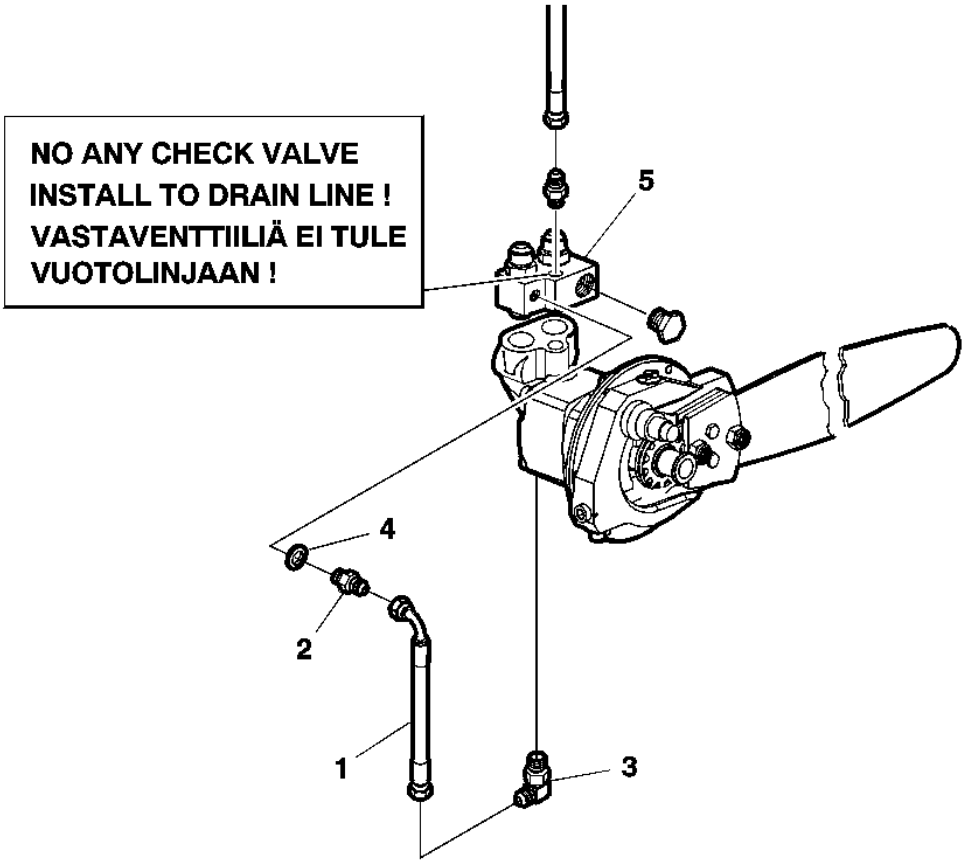

WJTF3386

THIS PARTS LISTING IS CONTINUED

C20

FLUSHING HOSE FOR SAW MOTOR
FROM SERIAL NO. EJ0762C001613

KEY	PART NO.	PART NAME	QTY	SERIAL NO.	REMARKS
1	F054371	HYDRAULIC HOSE - FABRICATE	1		
2	F058999	ORIFICE	1		
3	F024402	ELBOW FITTING	1		
4	F005164	SEALING WASHER	1		
5	F066990	VALVE STACK	1		

WJTF2201 -UN-23JUN03

HARVESTER HEAD HYDRAULIC HOSES

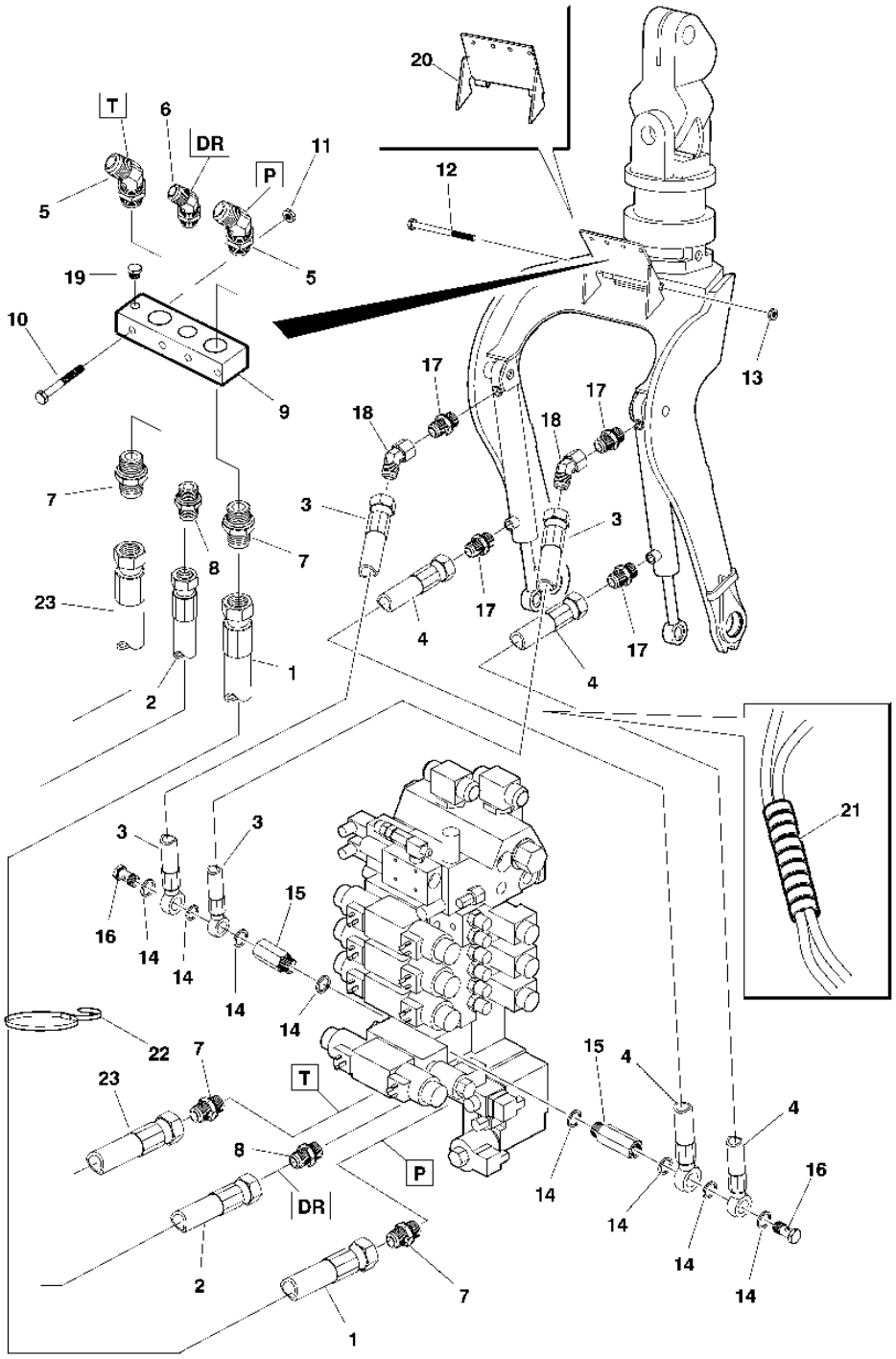

TF2201

HARVESTER HEAD HYDRAULIC HOSES

KEY	PART NO.	PART NAME	QTY	SERIAL NO.	REMARKS
1	F065007	HOSE	1		STADARD
	F065016	HYDRAULIC HOSE - FABRICATE	1		HD
2	F065009	HYDRAULIC HOSE - FABRICATE	1		
3	F043895	HYDRAULIC HOSE	2		
4	F043894	HYDRAULIC HOSE	2		
5	F005091	ELECTRICAL CONNECTOR ASSY	2		
6	F020756	ELBOW FITTING	1		
7	F005095	FITTING	4		
8	F005063	FITTING	2		
9	F048122	JUNCTION BLOCK	1		
10	F003487	SCREW	4		
11	F003588	LOCK NUT	4		
12	F013609	BOLT	1		
13	F003590	LOCK NUT	1		
14	F005167	SEALING TRIM	8		
15	F019945	UNION FITTING	2		
16	F027699	SCREW	2		
17	F005055	FITTING	4		
18	F013594	ELBOW FITTING	2		
19	F018111	PLUG	1		
20	F049133	BRACKET	1		
21	F032110	HOSE GUARD	2		
22	F011353	STRAP WITH BUCKLE	4		
23	F065008	HYDRAULIC HOSE - FABRICATE	1		STANDARD
	F065017	HYDRAULIC HOSE - FABRICATE	1		HD

HARVESTER HEAD HYDRAULIC OIL LINES

WJTF2200 -UN-01JUN01

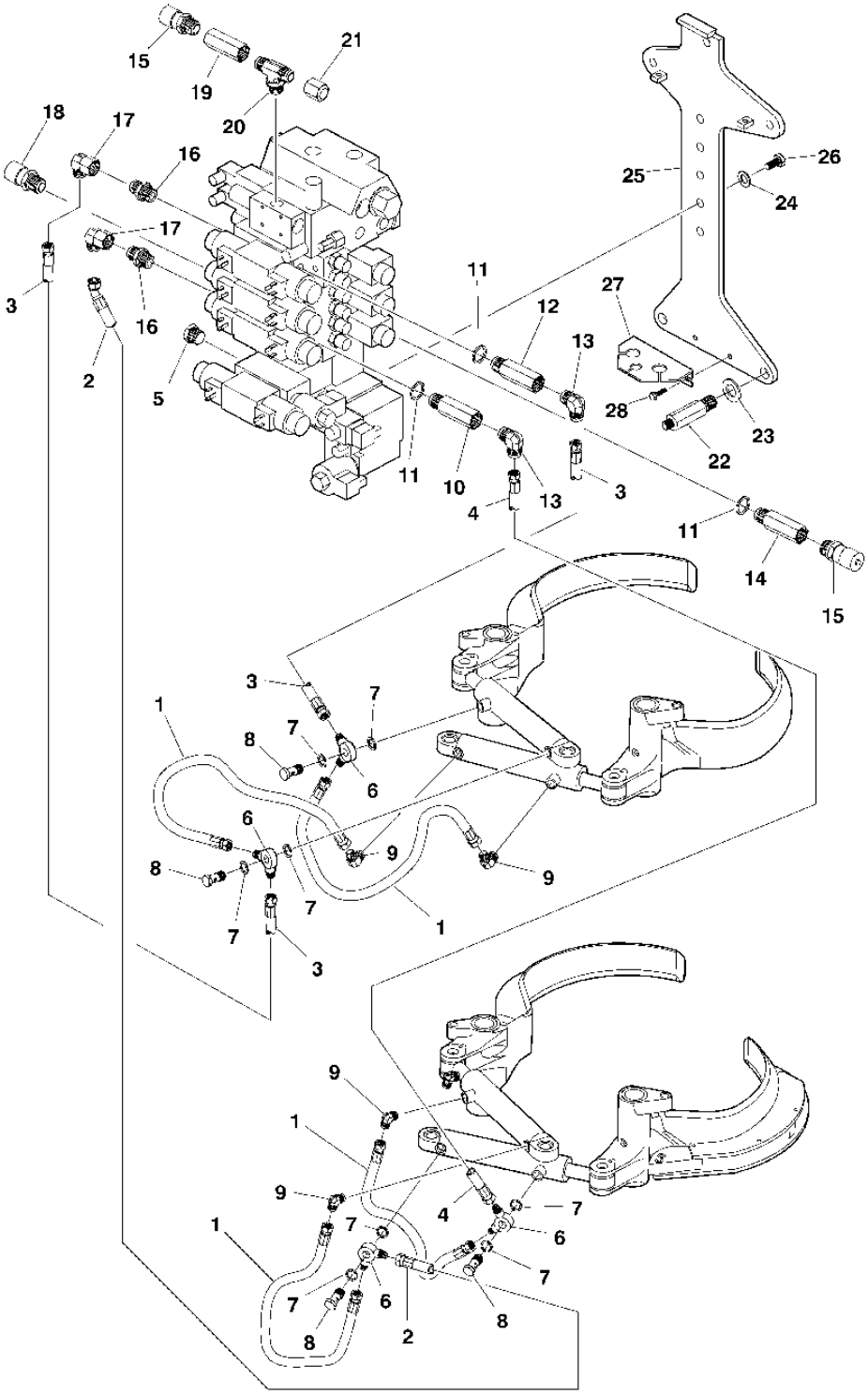

TF2200

THIS PARTS LISTING IS CONTINUED

HARVESTER HEAD HYDRAULIC HOSES

KEY	PART NO.	PART NAME	QTY	SERIAL NO.	REMARKS
1	F048985	HYDRAULIC HOSE - FABRICATE	4		
2	F059094	HYDRAULIC HOSE - FABRICATE	1		
3	F046726	HYDRAULIC HOSE - FABRICATE	2		
4	F048990	HYDRAULIC HOSE - FABRICATE	1		
5	F018111	PLUG	1		
6	F012529	SCREW	4		
7	F005168	SEAL	8		
8	F005557	SCREW	4		
9	F012592	ELBOW FITTING	4		
10	F019944	UNION FITTING	1		
11	F005167	SEALING TRIM	2		
12	F019945	UNION FITTING	1		
13	F010072	ELBOW FITTING	2		
14	F046045	ELEC. CONNECTOR HOUSING	1		
15	F017320	FITTING	2		
16	F005060	FITTING	2		
17	F005045	ELBOW FITTING	2		
18	F047314	THREADED NIPPLE	1		
19	F024364	FITTING	1		
20	F026606	TEE FITTING	1		
21	F025469	NUT	1		
22	F600853	BAR	2		
23	F005012	LOCK WASHER	2		
24	F002805	LOCK WASHER	10		
25	F602510	PLATE	1		
26	F003542	SCREW	10		
27	F052499	BRACKET	1		
28	F043165	SCREW	2		

HARVESTER HEAD FEED WHEEL HYDRAULIC HOSES

WJTF2202 -UN-01JUN01

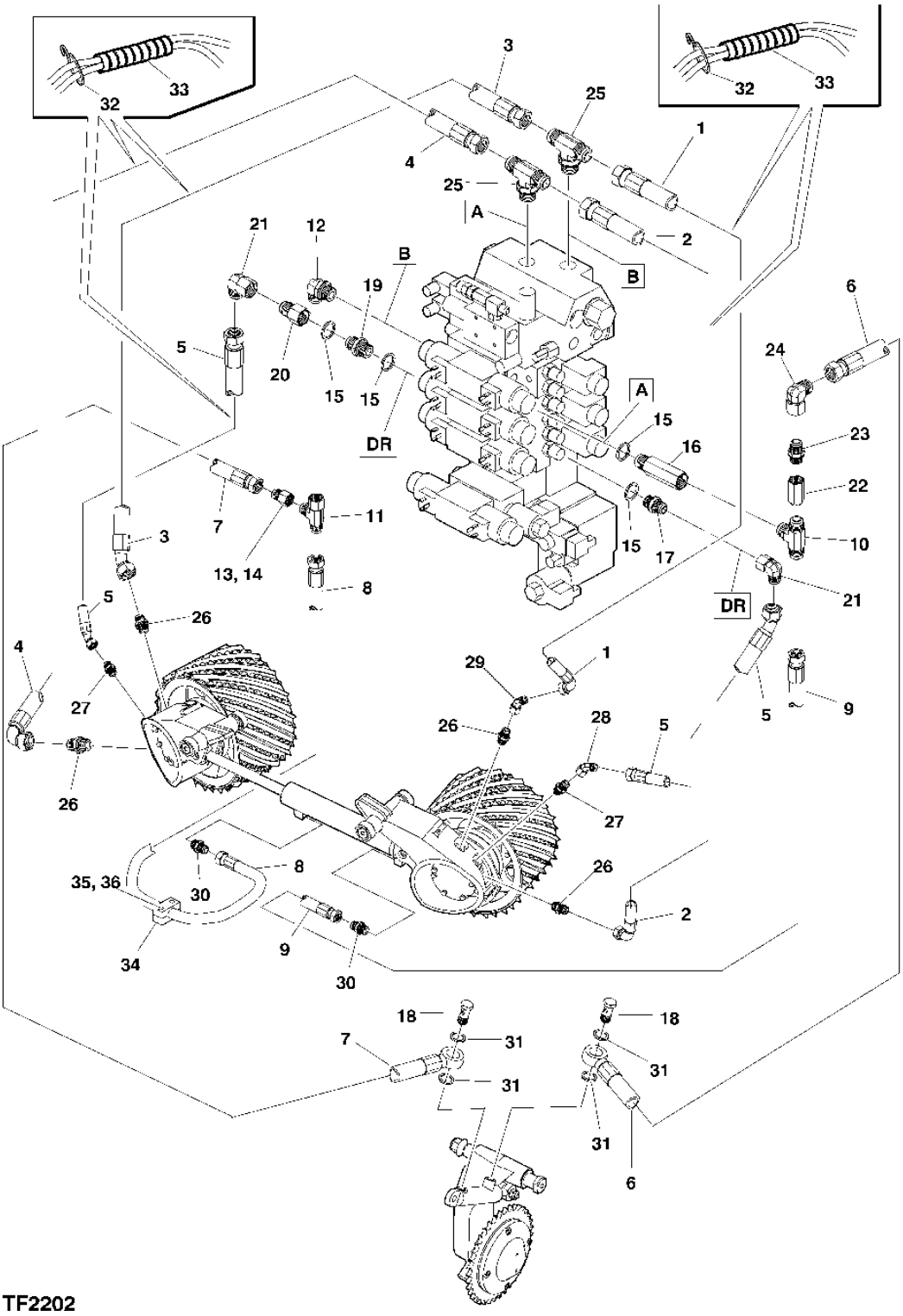

HARVESTER HEAD HYDRAULIC HOSES

KEY	PART NO.	PART NAME	QTY	SERIAL NO.	REMARKS
1	F065012	HYDRAULIC HOSE - FABRICATE	1		STANDARD
	F065018	HYDRAULIC HOSE - FABRICATE	1		HD
2	F065013	HYDRAULIC HOSE - FABRICATE	1		
3	F065011	HYDRAULIC HOSE - FABRICATE	1		
4	F065010	HYDRAULIC HOSE - FABRICATE	1		
5	F046729	HYDRAULIC HOSE - FABRICATE	2		
6	F054697	HYDRAULIC HOSE	1		
7	F046728	HYDRAULIC HOSE - FABRICATE	1		
8	F048981	HYDRAULIC HOSE - FABRICATE	1		
9	F054696	HYDRAULIC HOSE - FABRICATE	1		
10	F012520	ELECTRICAL CONNECTOR ASSY	1		
11	F005073	TEE FITTING	1		
12	F012592	ELBOW FITTING	1		
13	F010079	SLEEVE FITTING	1		
14	F025424	FITTING	1		
15	F005167	SEALING TRIM	4		
16	F019944	UNION FITTING	1		
17	F005060	FITTING	1		
18	F012789	BOLT	2		
19	F004357	FITTING	1		
20	F011485	FITTING	1		
21	F005045	ELBOW FITTING	2		
22	F054598	FITTING	1		
23	F042067	THREADED NIPPLE	1		
24	F022417	ELBOW FITTING	1		
25	F046718	TEE FITTING	2		
26	F041376	FITTING	4		
27	F026256	FITTING	2		
28	F012521	ELBOW FITTING	1		
29	F005089	ELBOW FITTING	1		
30	F005059	FITTING	2		
31	51M4236	SEALING RING	4		
32	F005334	TIE BAND	5		
33	F032113	HOSE GUARD	2		
34	F017598	HOSE SUPPORT	1		
35	F003405	CAP SCREW	2		
36	F003586	LOCK NUT	2		

CUTTING SAW LUBRICATION SYSTEM

WJTF1241 -UN-01JUN01

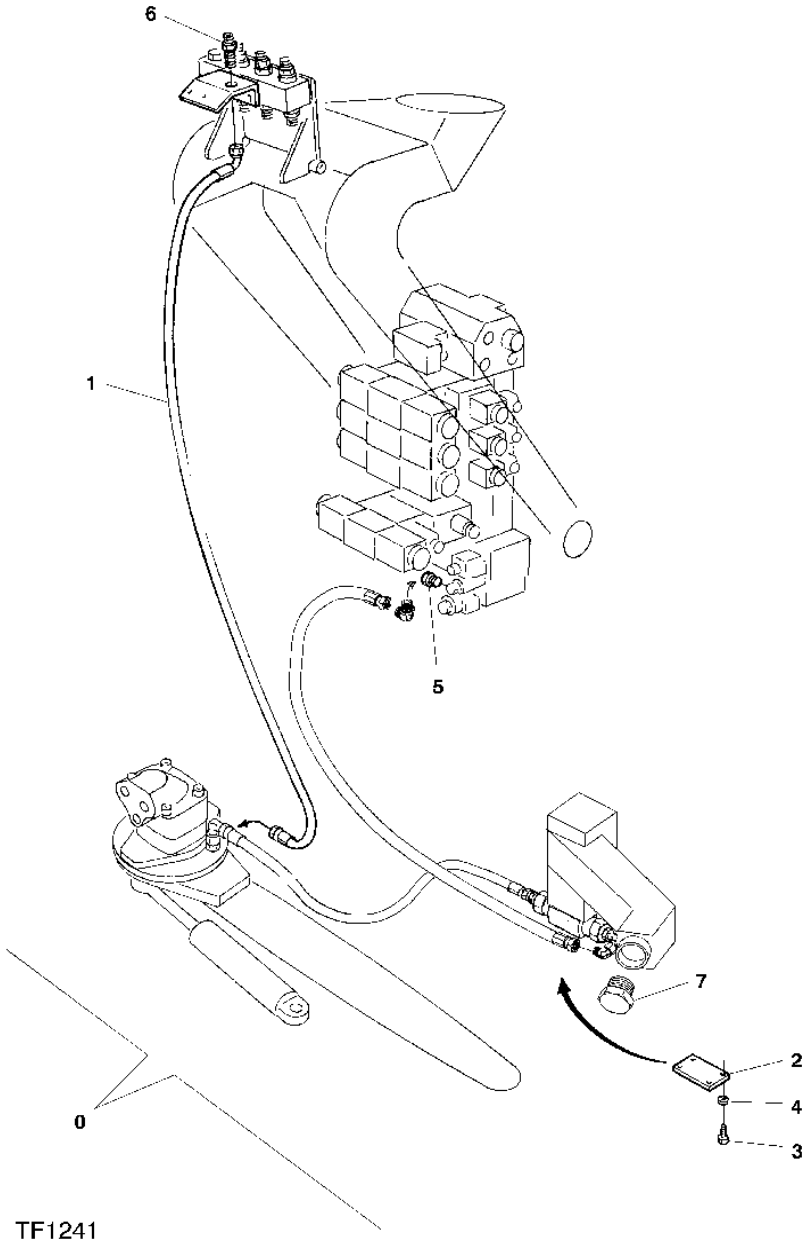

THIS PARTS LISTING IS CONTINUED

CUTTING SAW LUBRICATION SYSTEM

KEY	PART NO.	PART NAME	QTY	SERIAL NO.	REMARKS
0	F052410	LUBRICATOR	1		INCL. POS. 1-7
1	F044399	HYDRAULIC HOSE - FABRICATE	1		
2	F052417	PLATE	1		
3	F003519	SCREW	4		
4	F003337	WASHER	4		
5	F018111	PLUG	1		
6	F050224	FITTING	1		
7	F053342	PLUG	1		

DROPPEN CHAIN LUBRICATION SYSTEM, OPTION

WJTF3216 -UN-24JUN04

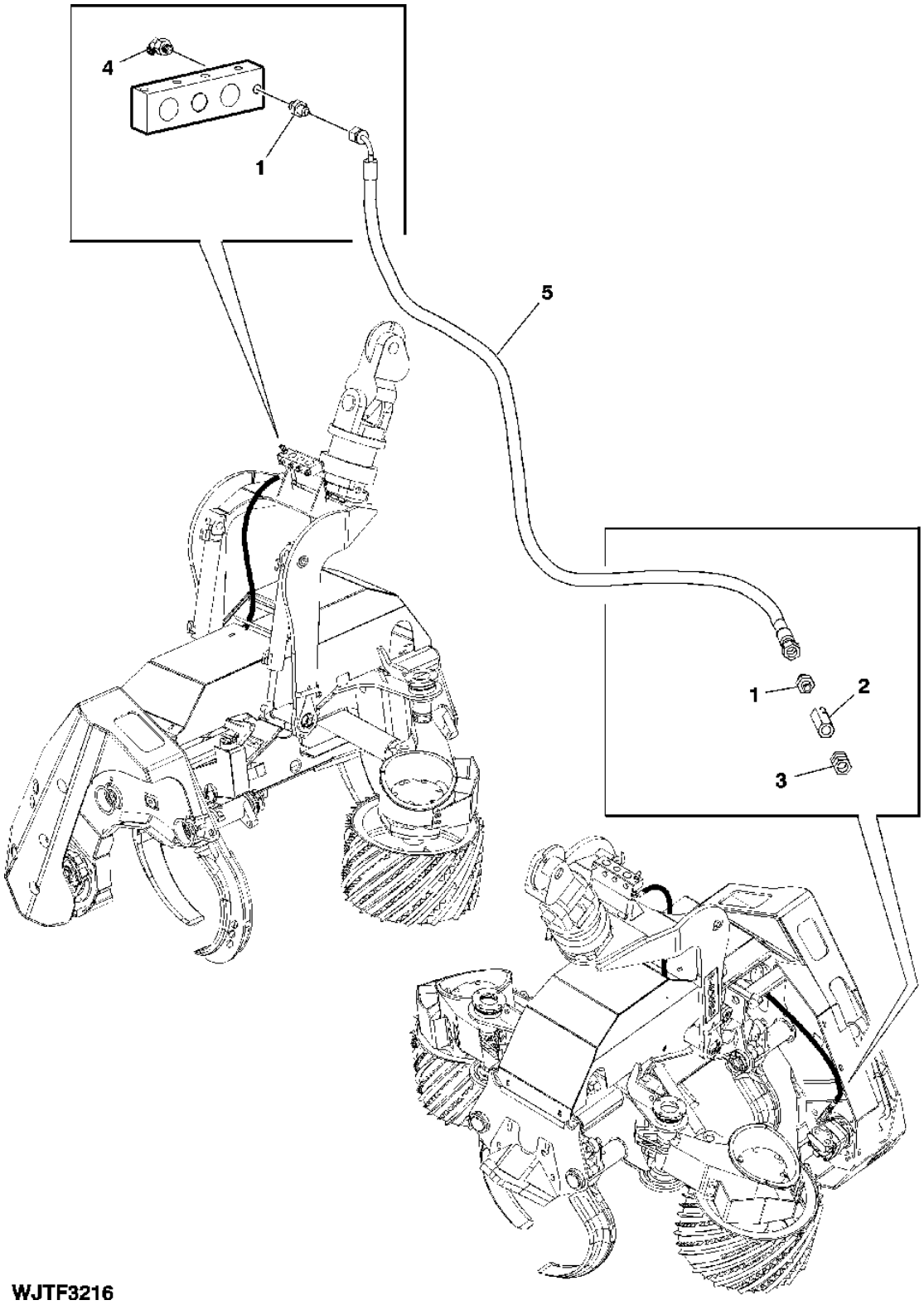

THIS PARTS LISTING IS CONTINUED

DROPPEN CHAIN LUBRICATION SYSTEM, OPTION

KEY	PART NO.	PART NAME	QTY	SERIAL NO.	REMARKS
0	F631952	LUBRICATOR	1		INCL. ITEMS 1-5
1	F005057	FITTING	2		
2	F020746	CHECK VALVE	1		
3	F024875	FITTING	1		
4	F031744	ELBOW FITTING	1		
5	F044399	HYDRAULIC HOSE - FABRICATE	1		

CONTROL VALVE WIRE LEADS AND JUNCTION BLOCK

WJTF2195 -UN-01JUN01

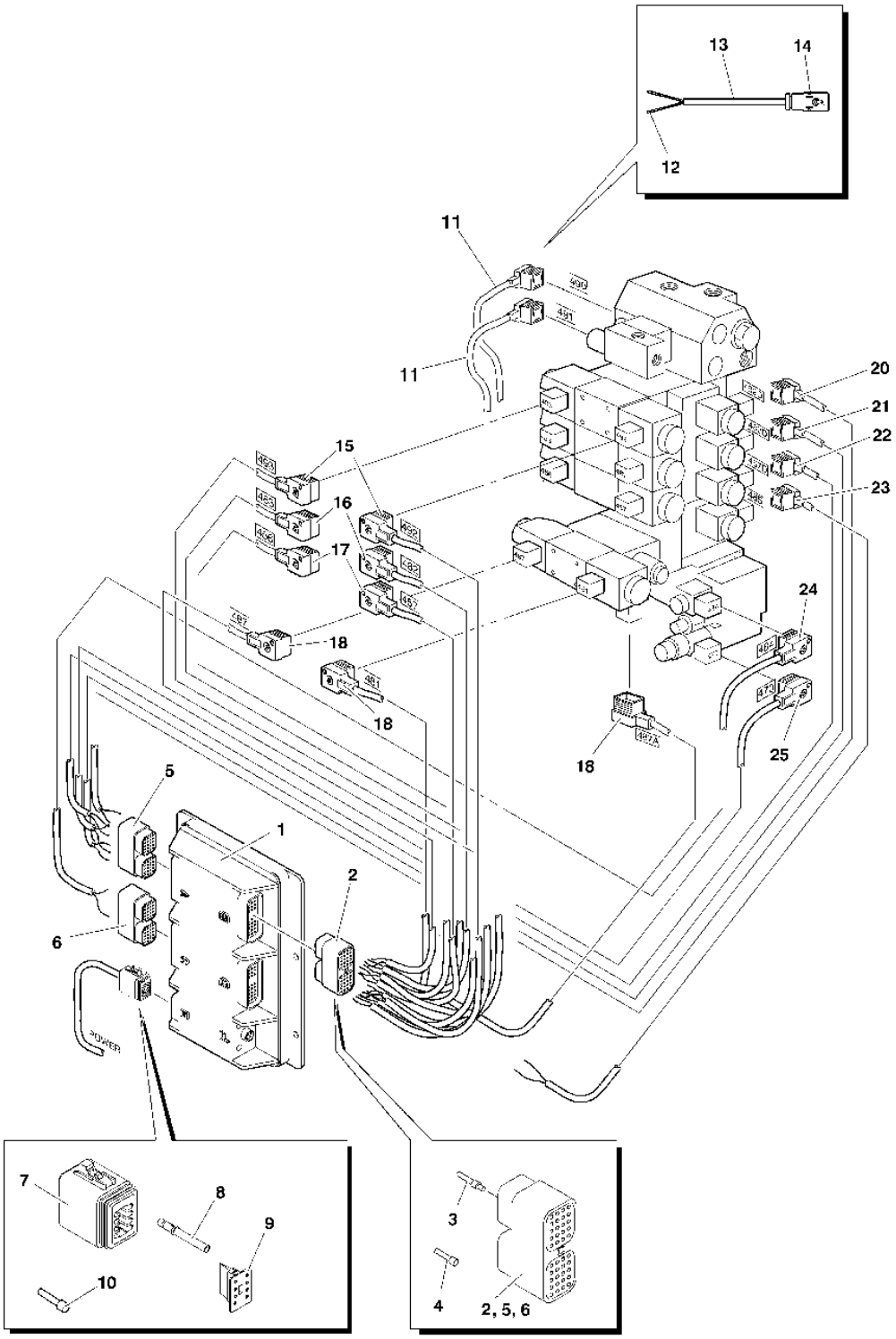

TF2195

THIS PARTS LISTING IS CONTINUED

CONTROL VALVE WIRE LEADS AND JUNCTION BLOCK

KEY	PART NO.	PART NAME	QTY	SERIAL NO.	REMARKS
1	F626692	COMPUTER HARDWARE ITEM	1		(REPLACES F619559)
2	F055285	ELECTRICAL CONNECTOR ASSY	1		
3	F055290	SOCKET	32		
4	F057306	PLUG	109		
5	F055284	ELECTRICAL CONNECTOR ASSY	1		
6	F055286	ELECTRICAL CONNECTOR ASSY	1		
7	F053688	ELECTRICAL CONNECTOR ASSY	1		
8	F055139	SOCKET	8		
9	F053689	LOCK	1		
10	F052693	PLUG	8		
11	F616802	CABLE	2		INCL. POS. 12..14
12	.....	SOCKET CONTACT	2		
13	.....	CABLE	1		
14	.....	CONNECTOR	1		
15	F604458	CABLE	2		INCL. POS. 3
16	F604488	CABLE	2		INCL. POS. 3
17	F604487	CABLE	2		INCL. POS. 3
18	F604486	CABLE	3		INCL. POS. 3
20	F604485	CABLE	1		INCL. POS. 3
21	F604484	CABLE	1		INCL. POS. 3
22	F604483	CABLE	1		INCL. POS. 3
23	F616155	CABLE	1		
24	F604482	CABLE	1		INCL. POS. 3
25	F604480	CABLE	1		INCL. POS. 3

HARVESTER HEAD HYDRAULIC HOSES AND WIRING HARNESS

WJTF2206 -UN-29JUN04

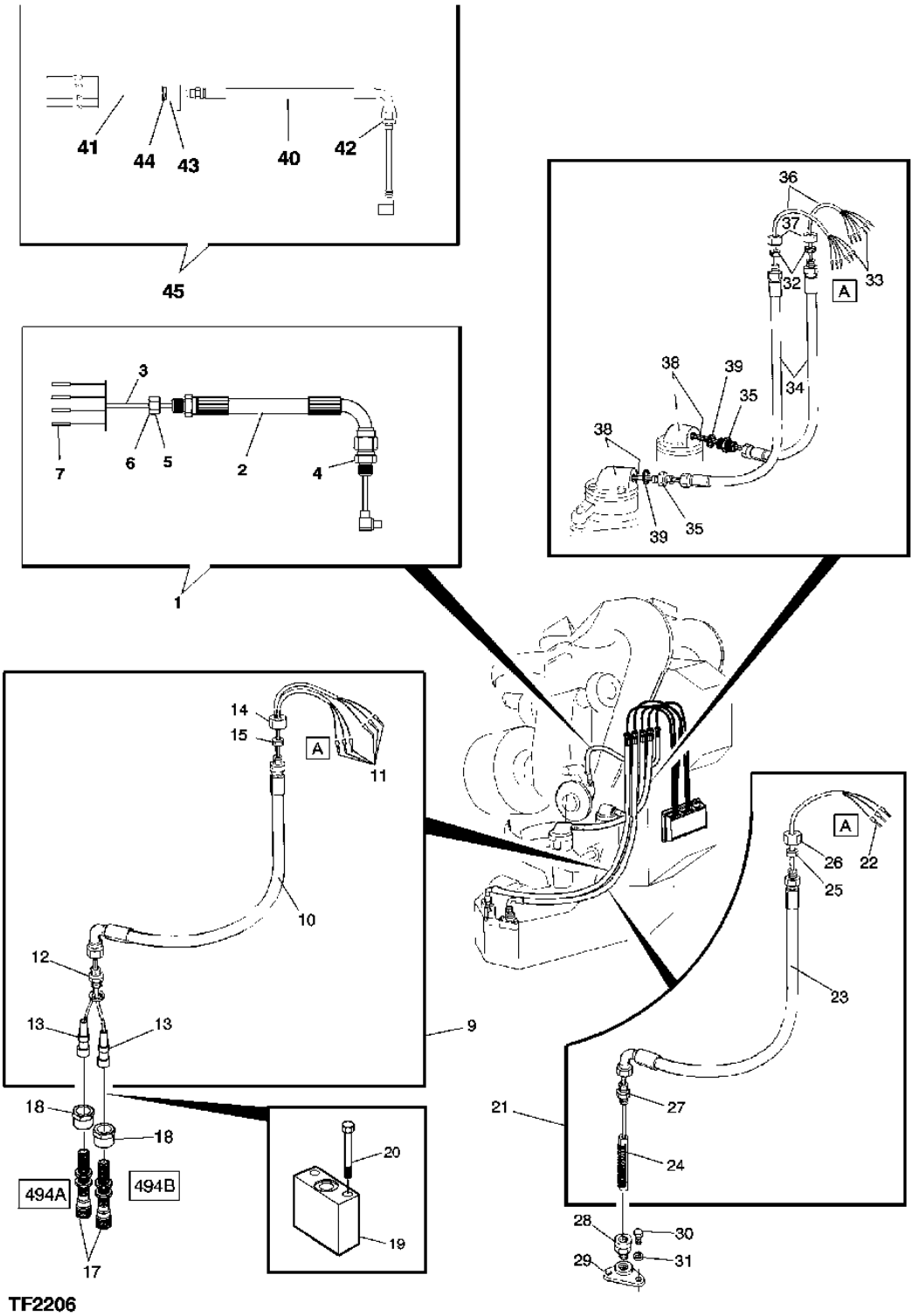

TF2206

THIS PARTS LISTING IS CONTINUED

HARVESTER HEAD HYDRAULIC HOSES AND WIRING HARNESS

KEY	PART NO.	PART NAME	QTY	SERIAL NO.	REMARKS
1	F617312	WIRING HARNESS	1		INCL. POS. 2...7
2	F028861	HYDRAULIC HOSE - FABRICATE	1		
3	F060433	CABLE	1		
4	F005055	FITTING	1		
5	F022415	SLEEVE FITTING	1		
6	F028802	CONDUIT	1		
7	F055290	SOCKET	1		
9	F604241	WIRING HARNESS	1		INCL. 10-15
10	F049009	HYDRAULIC HOSE - FABRICATE	1		
11	F055290	SOCKET	6		
12	F005060	FITTING	1		
13	F018091	SENSOR	2		
14	F010079	SLEEVE FITTING	1		
15	F028803	CONDUIT	1		
17	F018090	SENSOR	2		
18	F025632	SPACER	2		
19	F009843	CASE	1		
20	F003478	SCREW	1		
21	F604260	WIRING HARNESS	1		INCL. 22-27
22	F055290	SOCKET	3		
23	F049008	HYDRAULIC HOSE - FABRICATE	1		
24	F049007	SENSOR	1		INCL. CABLE
25	F028803	CONDUIT	1		
26	F010079	SLEEVE FITTING	1		
27	F010919	FITTING	1		
28	F010919	FITTING	1		
29	F035590	HOLDER	1		
30	F003541	SCREW	2		
31	F002805	LOCK WASHER	2		
32	F028802	CONDUIT	2		
33	F055290	SOCKET	12		
34	F031713	HYDRAULIC HOSE - FABRICATE	1		
35	F004357	FITTING	2		
36	.....	BULK HOSE	2		F061721 L=10M BULK MATERIAL
37	F022415	SLEEVE FITTING	2		
38	.....	SENSOR	1		SEE PAGE 4440-12
39	F005166	SEAL	2		
40	F028861	HYDRAULIC HOSE - FABRICATE	1		
41	F061533	CABLE	1		
42	F005055	FITTING	1		
43	F022415	SLEEVE FITTING	1		
44	F028802	CONDUIT	1		
45	F620348	CABLE	1		INCL. ITEMS 40-44, (REPLACES F617312)

CABLE FOR LENGHT MEASURING FOR FEED WHEEL, OPTIO, EUCALYPTUS

WJTF3392 -UN-20JUN05

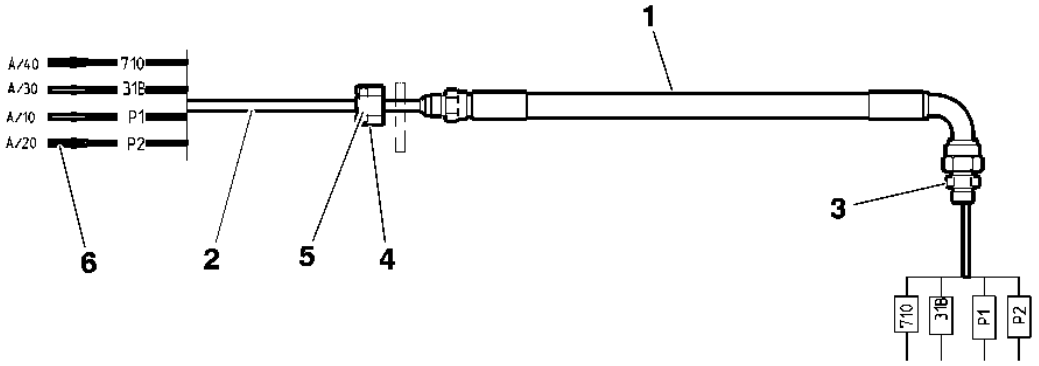

WJTF3392

D12

CABLE FOR LENGHT MEASURING FOR FEED WHEEL, OPTIO, EUCALYPTUS

KEY	PART NO.	PART NAME	QTY	SERIAL NO.	REMARKS
0	F604359	CABLE	1		
1	F055928	HYDRAULIC HOSE - FABRICATE	1		INCL. ITEM 1-6
2	.....	CABLE	1		F019370 X L
3	F005055	FITTING	1		
4	F022415	SLEEVE FITTING	1		
5	F028802	CONDUIT	1		
6	F055290	SOCKET	4		

CONTROL VALVE ELECTRONIC CONTROLLER MOUNTING PLATE

WJTF1614 -UN-01JUN01

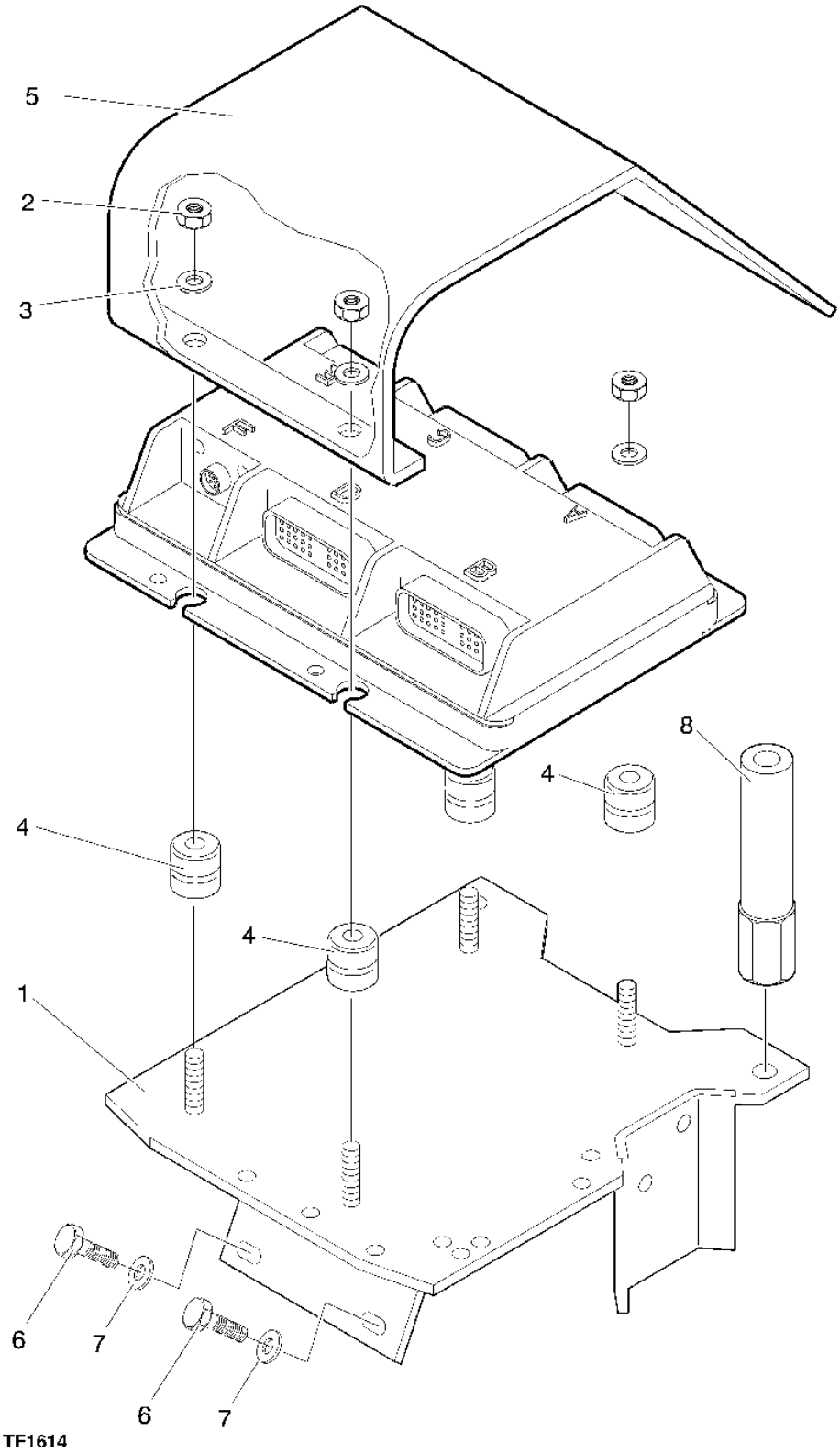

THIS PARTS LISTING IS CONTINUED

D14

CONTROL VALVE ELECTRONIC CONTROLLER MOUNTING PLATE

KEY	PART NO.	PART NAME	QTY	SERIAL NO.	REMARKS
1	F611781	PLATE	1		
2	43M5924	LOCK NUT	4		
3	F003722	WASHER	8		
4	F055044	GROMMET	4		
5	F600881	PLATE	1		
6	F003542	SCREW	2		
7	F003170	WASHER	2		
8	F600856	BAR	2		

ELECTRICAL BOX MOUNTING, TM10
(OPTIONAL EQUIPMENT)

WJTF1580 -19-13SEP01

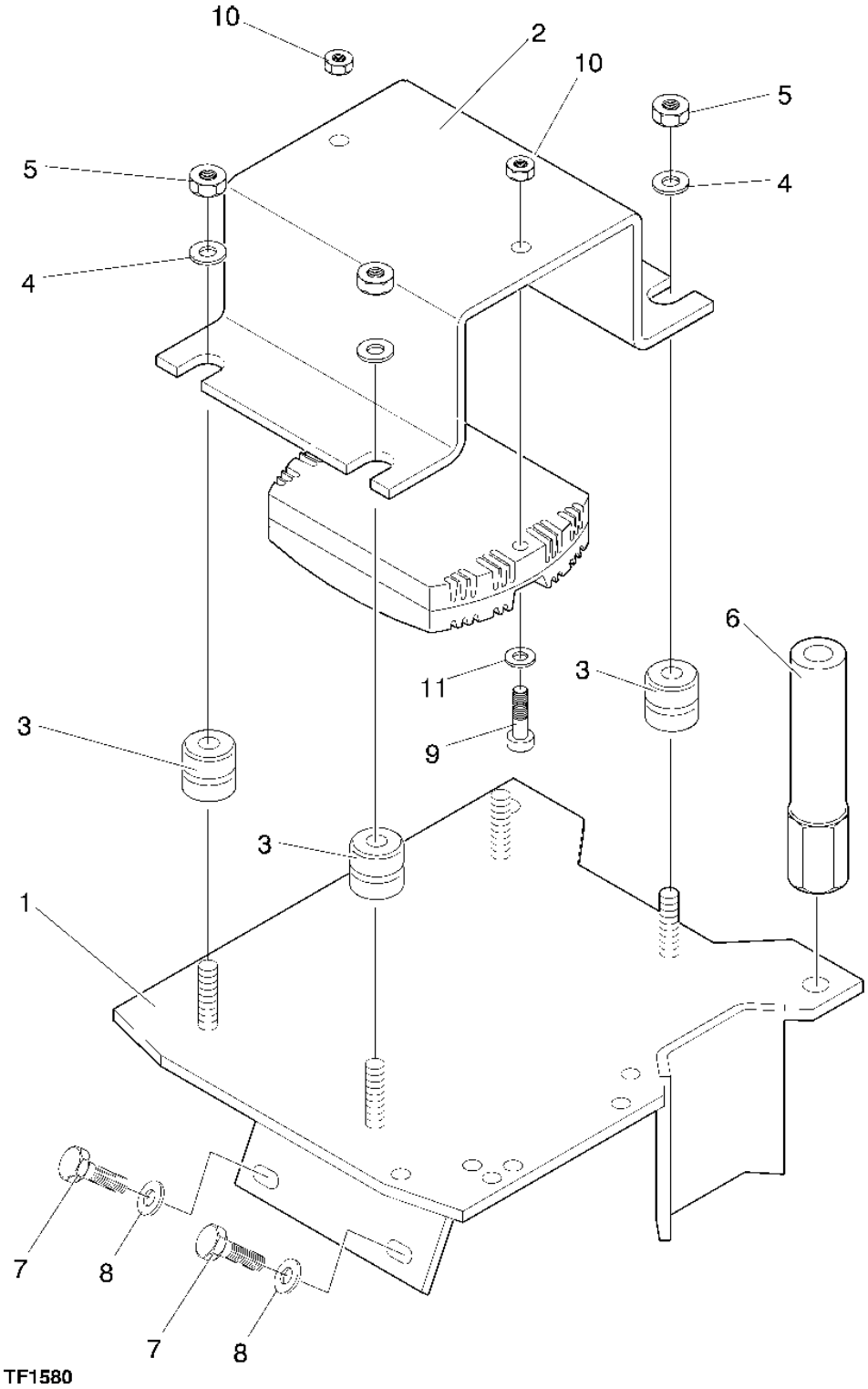

THIS PARTS LISTING IS CONTINUED

D16

ELECTRICAL BOX MOUNTING, TM10
(OPTIONAL EQUIPMENT)

KEY	PART NO.	PART NAME	QTY	SERIAL NO.	REMARKS
1	F600303	PLATE	1		
2	F603726	PLATE	1		
3	F055044	GROMMET	4		
4	F003722	WASHER	4		
5	F040934	NUT	4		
6	F600856	BAR	2		
7	F003542	SCREW	2		
8	F003170	WASHER	2		
9	F003404	CAP SCREW	2		
10	F041006	LOCK NUT	2		
11	12M7002	WASHER	2		

ELECTRICAL SYSTEM, TM10
(OPTIONAL EQUIPMENT)

WJTF1582 -19-13SEP01

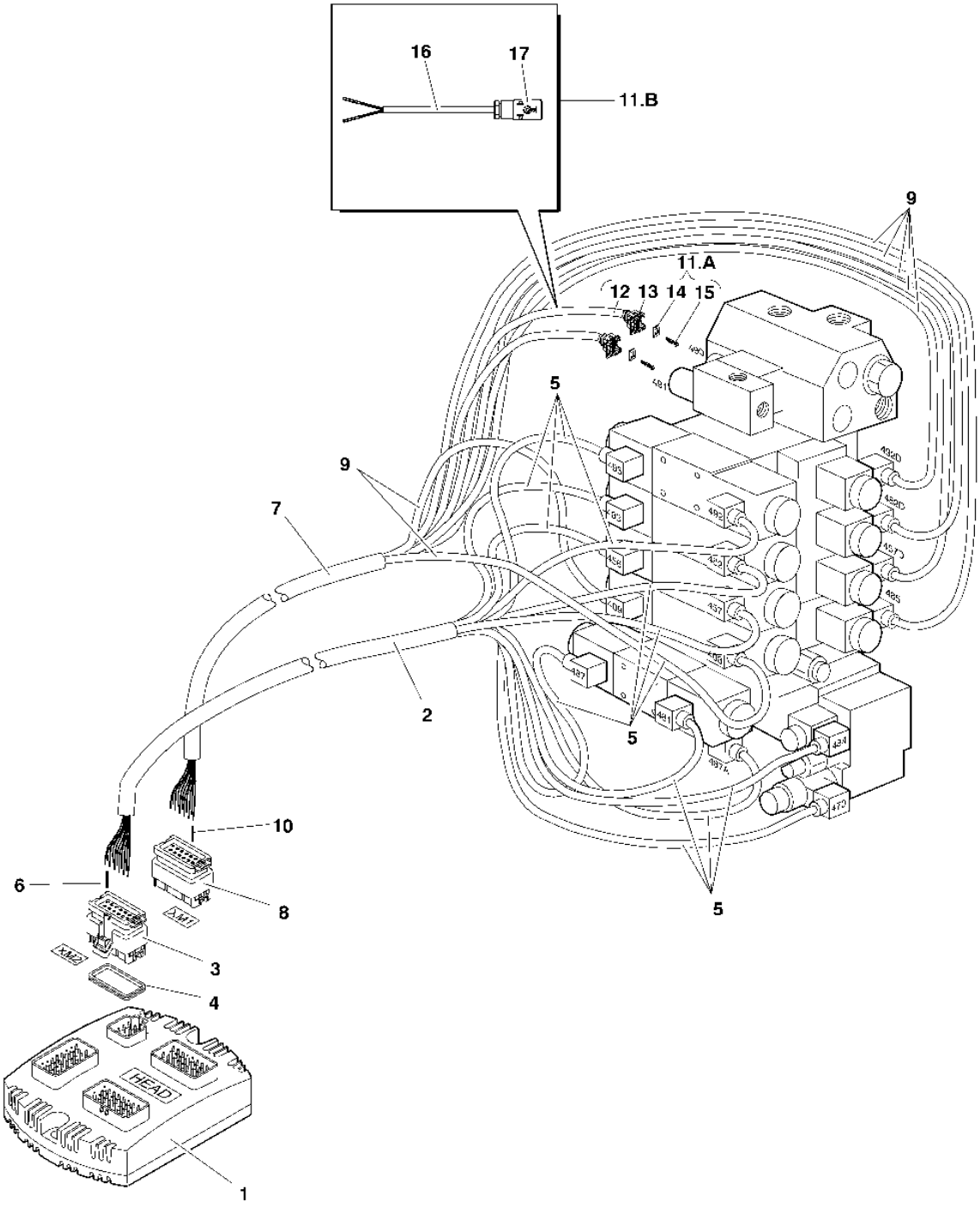

TF1582

ELECTRICAL SYSTEM, TM10
(OPTIONAL EQUIPMENT)

KEY	PART NO.	PART NAME	QTY	SERIAL NO.	REMARKS
1	F056541	MODULE	1		
2	F603824	WIRING HARNESS	1		INCL. POS. 3...6
3	F054941	ELECTRICAL CONNECTOR ASSY	1		
4	F057690	SEAL	2		
5	F035038	CABLE	12		
6	F053303	LUG	23		
7	F603827	WIRING HARNESS	1		INCL. POS. 8...14
8	F054940	ELECTRICAL CONNECTOR ASSY	1		
9	F035038	CABLE	5		
10	F053303	LUG	14		
11A	F603863	CABLE	2		INCLUDING ITEM 12...15
11B	F623562	CABLE	2		INCLUDING ITEM 16, 17
12	F046748	CABLE	1		
13	F024301	ELECTRICAL CONNECTOR ASSY	1		
14	F040655	GASKET	2		
15	F023007	SLEEVE	1		
16	.....	CABLE	2		F061701 L=20M, BULK MATERIAL
17	F038819	ELECTRICAL CONNECTOR ASSY	2		

ELECTRICAL SYSTEM, SENSORS TM10
(OPTIONAL EQUIPMENT)

WJTF1586 -19-24SEP01

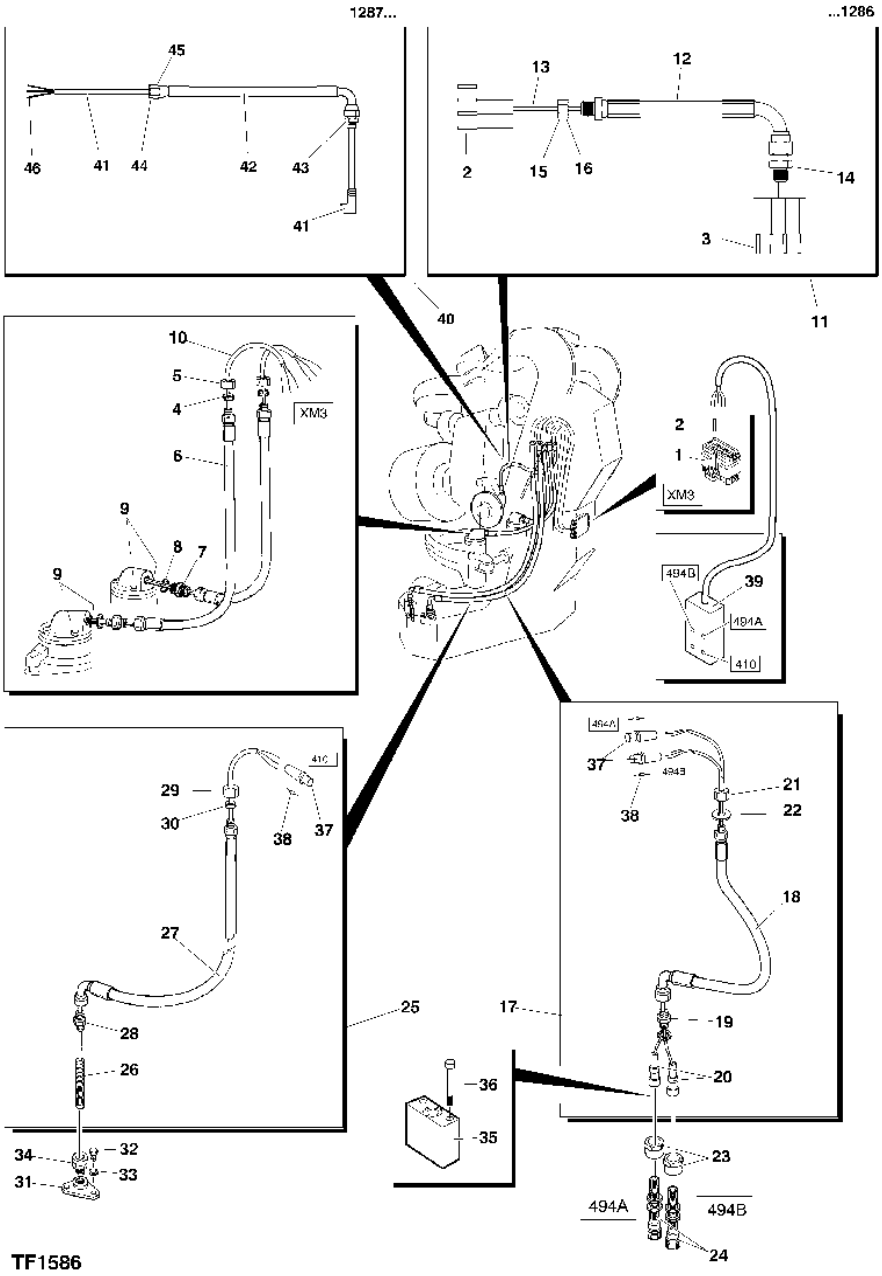

ELECTRICAL SYSTEM, SENSOR TM10
(OPTIONAL EQUIPMENT)

KEY	PART NO.	PART NAME	QTY	SERIAL NO.	REMARKS
1	F053324	ELECTRICAL CONNECTOR ASSY	1		
2	F053303	LUG	23		
3	F054301	SLEEVE	4		
4	F028802	CONDUIT	2		
5	F022415	SLEEVE FITTING	2		
6	F031713	HYDRAULIC HOSE - FABRICATE	2		
7	F004357	FITTING	2		
8	F005166	SEAL	2		
9	F021413	POTENTIOMETER	2	-1599	SEE PAGE 4440-12, ITEM 8
	F067033	POTENTIOMETER	2	1600-	
10	F014942	HOSE GUARD	2		
11	F603830	WIRING HARNESS	1	-1286	INCLUDING ITEM 3, 12...16
12	F028861	HYDRAULIC HOSE - FABRICATE	1		
13	.....	CABLE	1		F061695 L=25M, BULK MATERIAL
14	F005055	FITTING	1		
15	F022415	SLEEVE FITTING	1		
16	F028802	CONDUIT	1		
17	F603831	WIRING HARNESS	1		INCL. POS.18...22, 37, 38
18	F049009	HYDRAULIC HOSE - FABRICATE	1		
19	F005060	FITTING	1		
20	F018091	SENSOR	2		
21	F010079	SLEEVE FITTING	1		
22	F028803	CONDUIT	1		
23	F025632	SPACER	2		
24	F018090	SENSOR	2		
25	F603833	WIRING HARNESS	1		INCL. POS. 26...30, 37, 38
26	F049007	SENSOR	1		
27	F049008	HYDRAULIC HOSE - FABRICATE	1		
28	F010919	FITTING	1		
29	F010079	SLEEVE FITTING	1		
30	F028803	CONDUIT	1		
31	F035590	HOLDER	1		
32	F003541	SCREW	2		
33	F002805	LOCK WASHER	2		
34	F010919	FITTING	1		
35	F009843	CASE	1		
36	F003478	SCREW	2		
37	F058197	ELECTRICAL CONNECTOR ASSY	3		
38	F032160	RESISTOR	3		
39	F058177	CIRCUIT BOX	1		
40	F620347	CABLE	1	1287-	INCLUDING ITEM 41...46
41	F061533	CABLE	1		
42	F028861	HYDRAULIC HOSE - FABRICATE	1		
43	F005055	FITTING	1		
44	F022415	SLEEVE FITTING	1		
45	F028802	CONDUIT	1		
46	F053303	LUG	4		

THIS PARTS LISTING IS CONTINUED

WIRING HARNESS FOR CONNECTOR X2, ELECTRICAL SYSTEM TM10 3G+ OPTION

WJTF3240 -UN-15SEP04

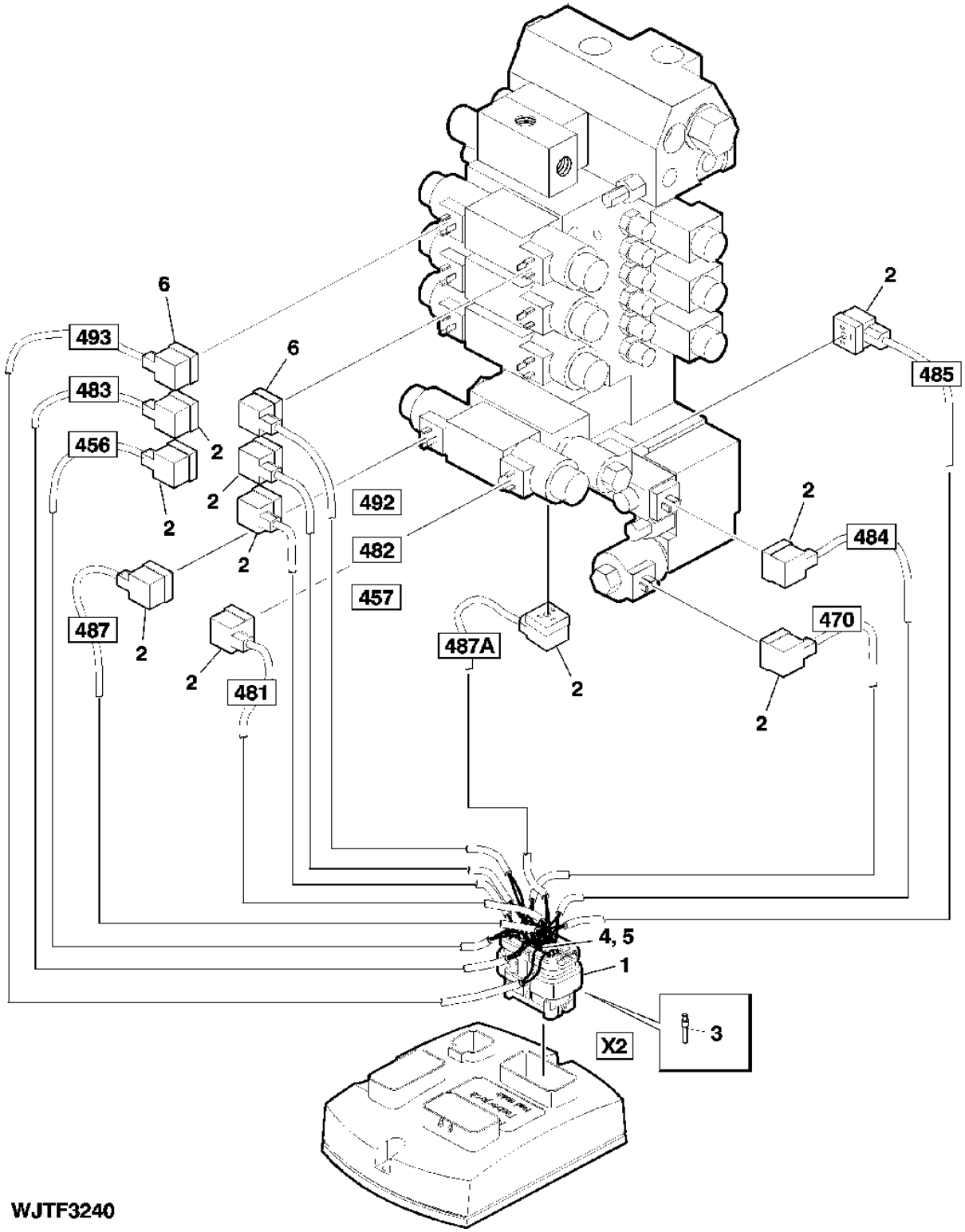

THIS PARTS LISTING IS CONTINUED

WIRING HARNESS FOR CONNECTOR X2, ELECTRICAL SYSTEM TM10 3G+ OPTION

KEY	PART NO.	PART NAME	QTY	SERIAL NO.	REMARKS
0	F631016	WIRING HARNESS	1		INCL. ITEM 1-7
1	F054941	ELECTRICAL CONNECTOR ASSY	1		
2	F035038	CABLE	1		485, L=850 MM
	F035038	CABLE	1		484, L=500 MM
	F035038	CABLE	1		470, L=450 MM
	F035038	CABLE	1		482, L=1000 MM
	F035038	CABLE	1		483, L=1000 MM
	F035038	CABLE	1		487A, L=900 MM
	F035038	CABLE	1		487, L=1000 MM
	F035038	CABLE	1		481, L=1000 MM
	F035038	CABLE	1		457, L=950 MM
	F035038	CABLE	1		456, L=950 MM
3	F053303	LUG	20		
4	F053271	ELECTRICAL CONNECTOR ASSY	1		
5	.....	CONDUIT	1		F053272 X 30 MM
6	F035505	CABLE	1		493, L=1050 MM
	F035505	CABLE	1		492, L=1050 MM

WIRING HARNESS FOR CONNECTOR X1, ELECTRICAL SYSTEM TM10 3G+ OPTION

WJTF3241 -UN-15SEP04

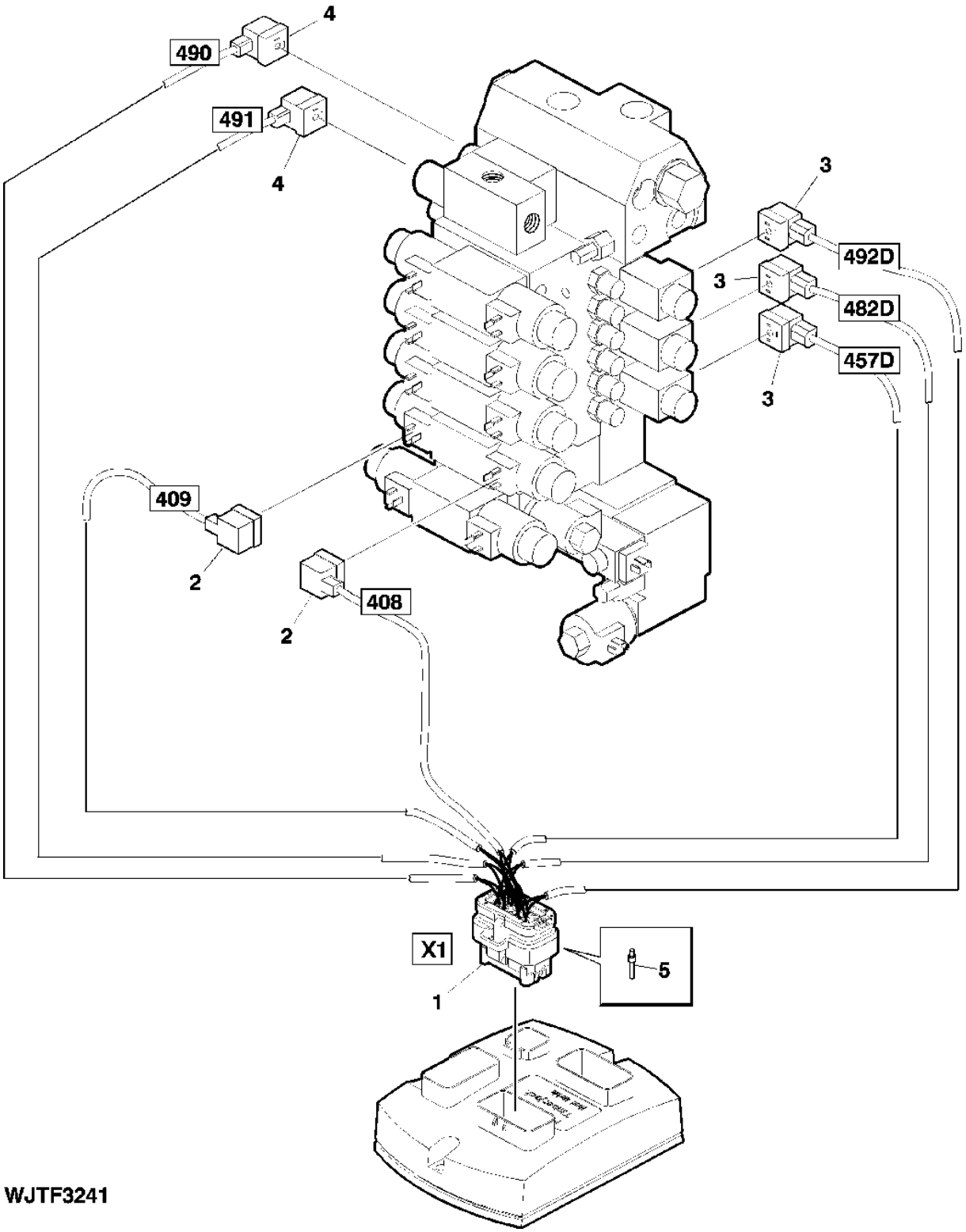

THIS PARTS LISTING IS CONTINUED

WIRING HARNESS FOR CONNECTOR X1, ELECTRICAL SYSTEM TM10 3G+ OPTION

KEY	PART NO.	PART NAME	QTY	SERIAL NO.	REMARKS
0	F631015	WIRING HARNESS	1		INCL. ITEM 1-5
1	F054940	ELECTRICAL CONNECTOR ASSY	1		
2	F035505	CABLE	2		408, 409, L=1050 MM
3	F035038	CABLE	1		482D, L=850 MM
	F035038	CABLE	1		457D, L=800 MM
	F035038	CABLE	1		492D, L=900 MM
4	F623562	CABLE	2		490, 491, L=1300 MM
5	F053303	LUG	14		

WIRING HARNESS FOR CONNECTOR X3 AND SAW POSITION SENSORS, OPTION **ELECTRICAL SYSTEM TM10 3G+**

WJTF3238 -UN-05OCT04

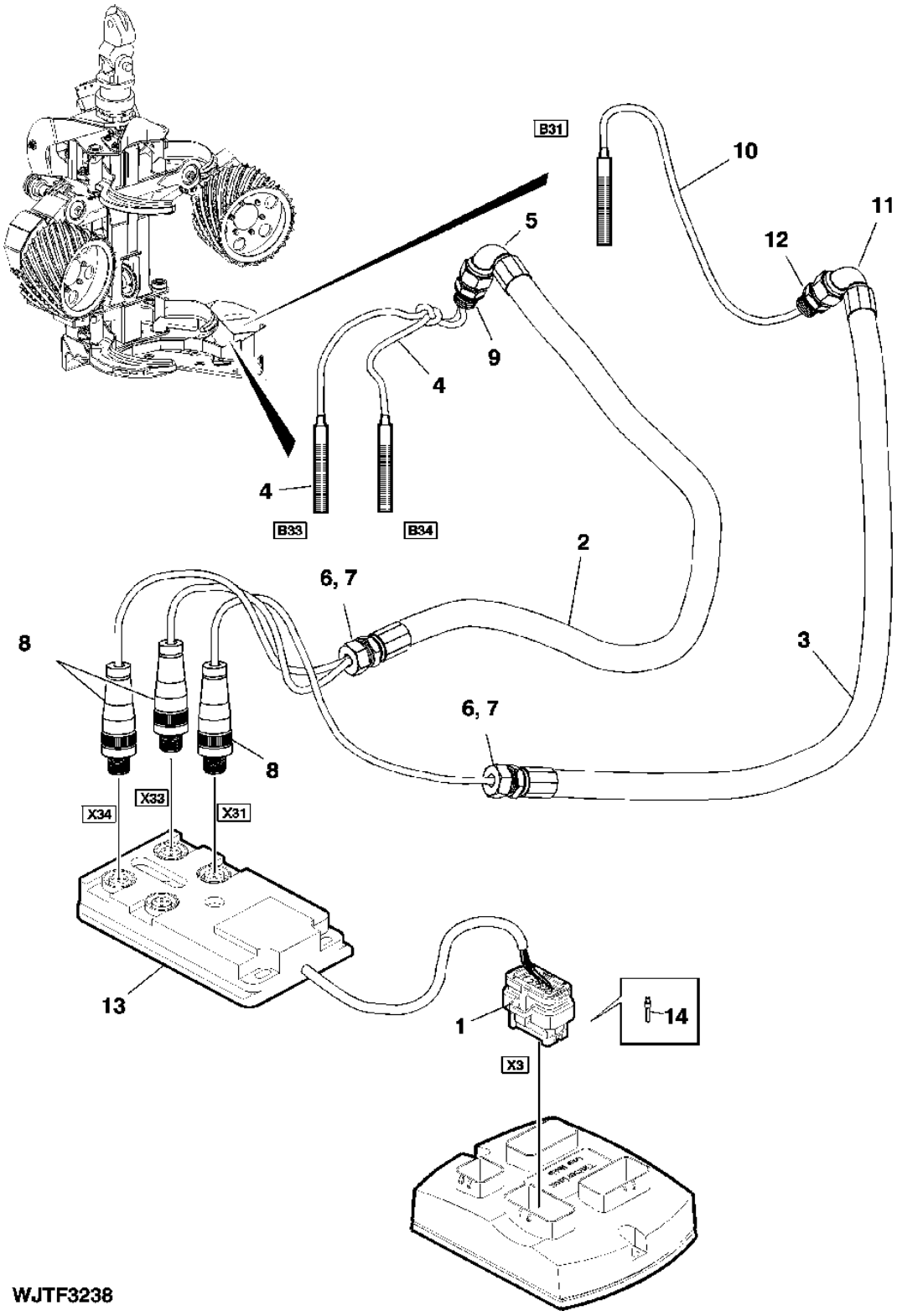

THIS PARTS LISTING IS CONTINUED

WIRING HARNESS FOR CONNECTOR X3 AND SAW POSITION SENSORS, OPTION **ELECTRICAL SYSTEM TM10 3G+**

KEY	PART NO.	PART NAME	QTY	SERIAL NO.	REMARKS
1	F053324	ELECTRICAL CONNECTOR ASSY	1		
2	F631018	WIRING HARNESS	1		INCL. ITEM 4-9
3	F631019	WIRING HARNESS	1		INCL. ITEM 6-12
4	F018091	SENSOR	2		
5	F049009	HYDRAULIC HOSE - FABRICATE	1		
6	F010079	SLEEVE FITTING	2		
7	F028803	CONDUIT	2		
8	F058197	ELECTRICAL CONNECTOR ASSY	3		
9	F005060	FITTING	1		
10	F049007	SENSOR	1		
11	F049008	HYDRAULIC HOSE - FABRICATE	1		
12	F010919	FITTING	1		
13	F612933	MICROCOMPUTER	1		INCL. ITEM 14
14	F053303	LUG	5		

WIRING HARNESS FOR CONNECTOR X3 AND DIAMETER, LENGTH MEASURING, OPTION **ELECTRICAL SYSTEM TM10 3G+**

WJTF3239 -UN-06OCT04

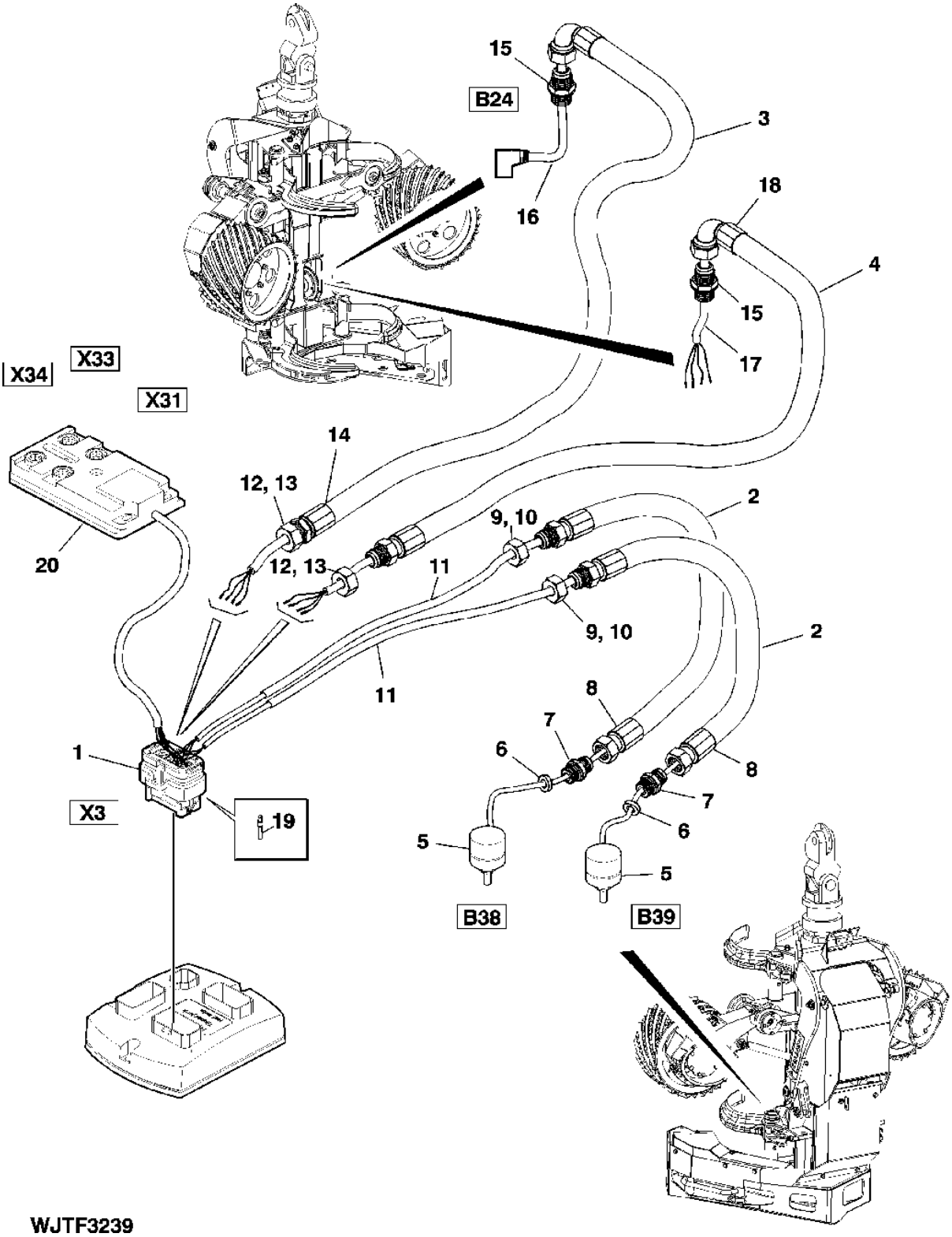

WJTF3239

THIS PARTS LISTING IS CONTINUED

WIRING HARNESS FOR CONNECTOR X3 AND DIAMETER, LENGTH MEASURING, OPTION **ELECTRICAL SYSTEM TM10 3G+**

KEY	PART NO.	PART NAME	QTY	SERIAL NO.	REMARKS
1	.....	CONNECTOR	1		SEE PAGE 4460-42
2	F603829	WIRING HARNESS	2		
3	F631020	WIRING HARNESS	1		INCL. ITEM 12-16, 19
4	F630922	WIRING HARNESS	1		FOR EUCALYPTUS, INCL. ITEM 12,13,15,17,18
5	.....	SENSOR	2		SEE PAGE 4440-12, SEE PAGE 4460-36
6	.....	SEAL	2		SEE PAGE 4460-36
7	.....	FITTING	2		SEE PAGE 4460-36
8	.....	HOSE	2		SEE PAGE 4460-36
9	.....	NUT	2		SEE PAGE 4460-36
10	.....	CONDUIT	2		SEE PAGE 4460-36
11	.....	HOSE GUARD	2		SEE PAGE 4460-36
12	F028802	CONDUIT	2		
13	F022415	SLEEVE FITTING	2		
14	F028861	HYDRAULIC HOSE - FABRICATE	1		
15	F005055	FITTING	2		
16	F061533	CABLE	1		
17	.....	CABLE	1		F019370 X L
18	F055928	HYDRAULIC HOSE	1		
19	F053303	LUG	14		
20	.....	CONNECTOR BODY (PIN&SOCKET)	1		SEE PAGE 4460-42

HYDRAULIC SYSTEM CONTROL VALVE

WJTF1030 -UN-01JUN01

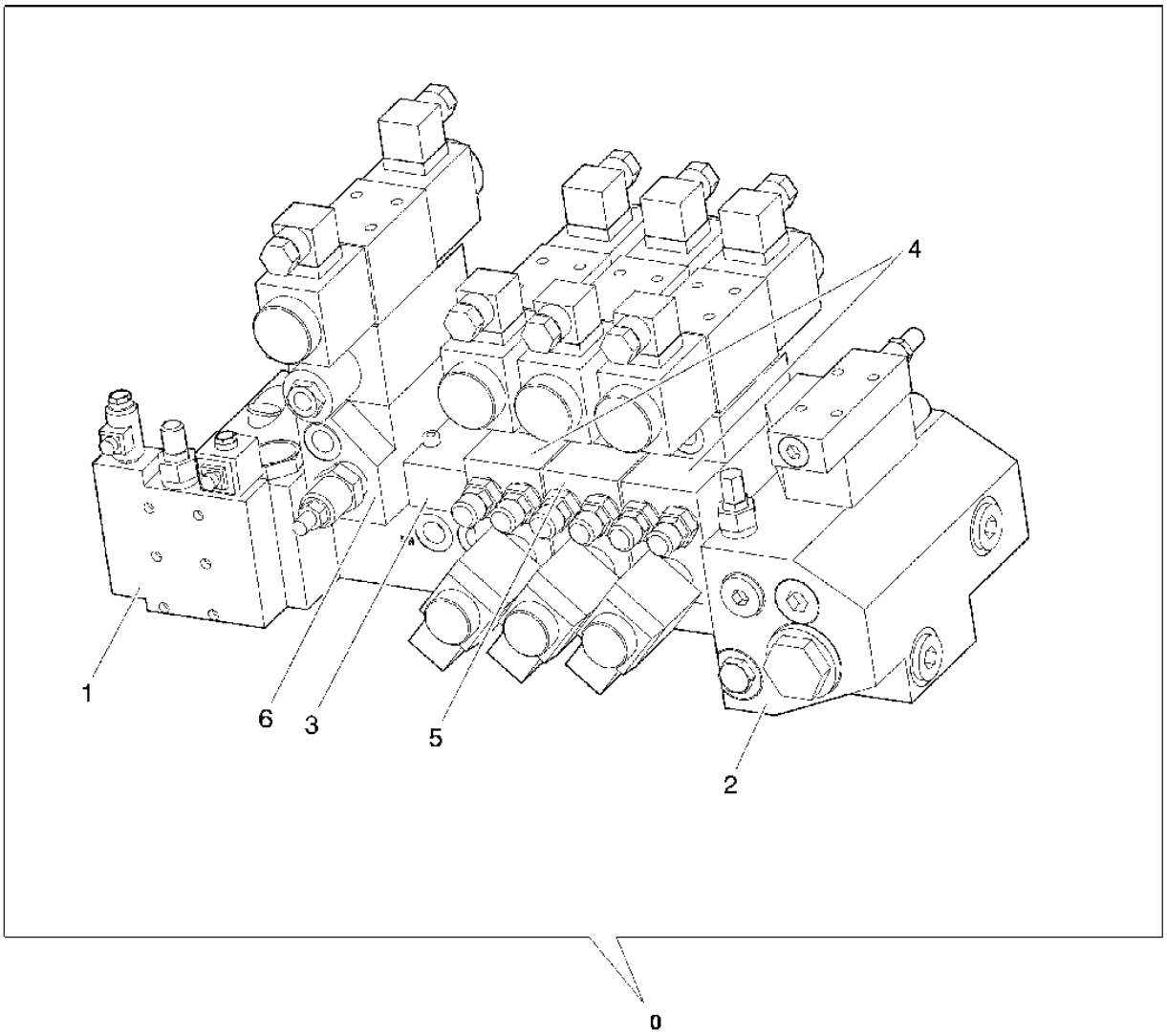

TF1030

THIS PARTS LISTING IS CONTINUED

HYDRAULIC SYSTEM CONTROL VALVE

KEY	PART NO.	PART NAME	QTY	SERIAL NO.	REMARKS
0	F054660	HYD ACTUATED CONTROL VALVE	1		INCL. POS. 1...6
1	F049327	HOUSING	1		SEE PAGE 4462-4
2	F049328	VALVE STACK	1		SEE PAGE 4462-6
3	F047626	JUNCTION BLOCK	1		SEE PAGE 4462-8
4	F028405	VALVE STACK	2		SEE PAGE 4462-10
5	F028407	HOUSING	1		SEE PAGE 4462-12
6	F054218	MANIFOLD	1		SEE PAGE 4462-14
..	F064852	SEAL KIT	AR		(A)
..	F003285	O-RING	8		
..	F003286	O-RING	27		
..	F004565	O-RING	2		
..	F018768	O-RING	7		
..	F018796	O-RING	2		
..	F021688	O-RING	2		
..	F008449	O-RING	4		
..	F018771	O-RING	9		
..	F018772	O-RING	9		
..	F021653	O-RING	2		

(A) NOTE! VALVE SEAL KIT, O-RINGS BETWEEN BLOCKS ONLY !

CONTROL VALVE CUTTING SAW BLOCK

WJTF1031 -UN-13NOV02

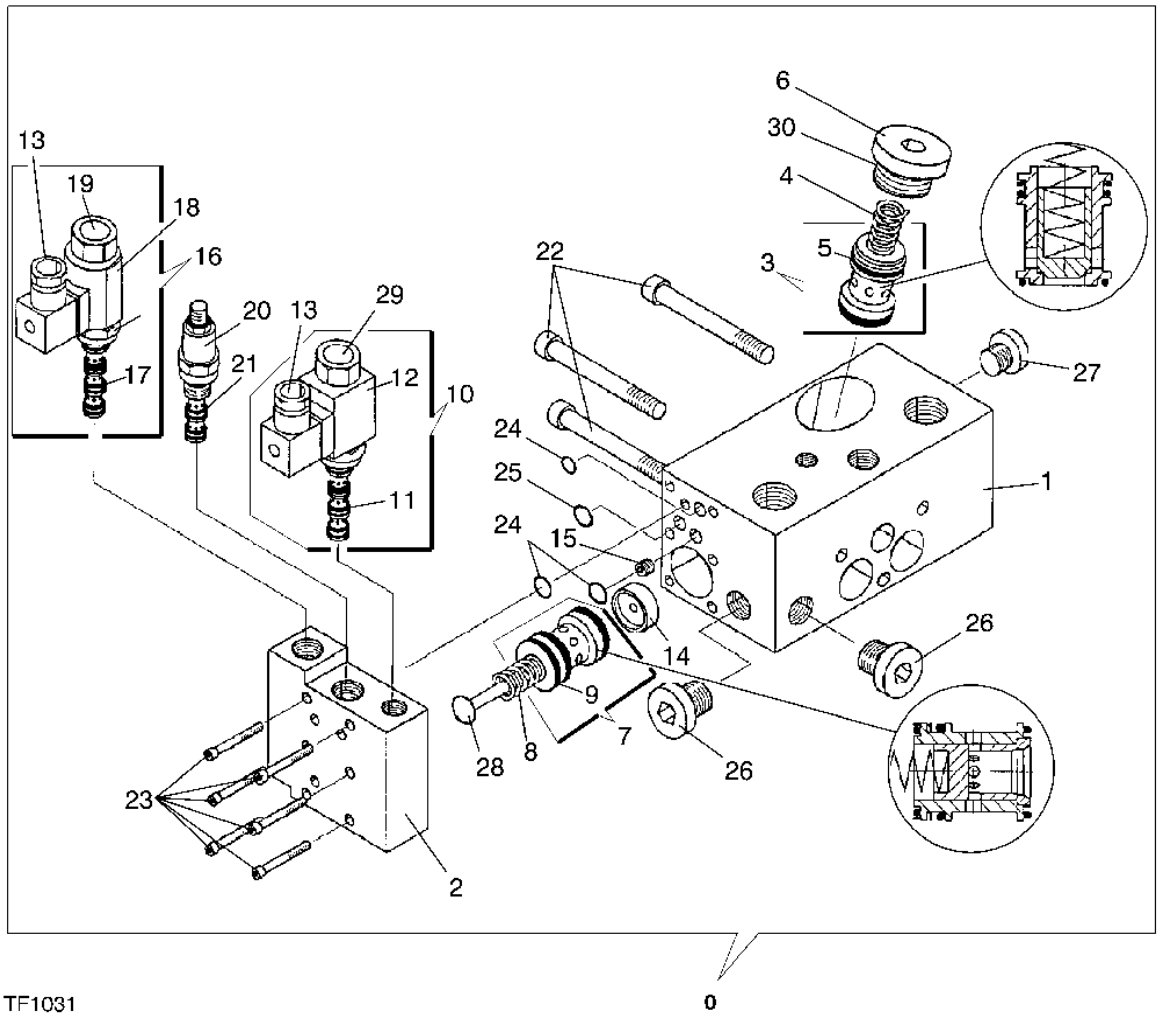

TF1031

CONTROL VALVE CUTTING SAW BLOCK

KEY	PART NO.	PART NAME	QTY	SERIAL NO.	REMARKS
0	F049327	HOUSING	1		
1	F048347	MANIFOLD	1		
2	F048346	MANIFOLD	1		
3	F062739	SPOOL VALVE	1		(REPLACES F038496), INCL.5
4	F038495	SPRING	1		
5	F065380	SEAL KIT	1		(REPLACES F018824)
6	F047850	PLUG	1		
7	F062740	PRESSURE RELIEF VALVE	1		(REPLACES F008637), INCL. ITEM 9
8	F035053	SPRING	1		
9	F065380	SEAL KIT	1		(REPLACES F018824)
10	F042086	SOLENOID HYDRAULIC VALVE	1		INCL.11,12
11	F028791	SEAL KIT	1		
12	F028789	SOLENOID	1		
13	F004578	ELECTRICAL CONNECTOR ASSY	2		
14	F040066	RESTRICTOR	1		
15	F046432	SCREW	1		
16	F054628	SPOOL VALVE	1		INCL. 17,19
17	F039180	SEAL KIT	1		
18	F021588	SOLENOID	1		
19	F054957	NUT	1		
20	F046419	HYDRAULIC PRESSURE VALVE	1		
21	F021587	SEAL KIT	1		
22	F008447	BOLT	3		
23	F010828	BOLT	6		
24	F003285	O-RING	3		
25	F003286	O-RING	1		
26	F005570	PLUG	2		
27	F018067	PLUG	1		
28	F056381	STOP	1		
29	F055155	NUT	1	-XXX	
	F061290	NUT	1	XXX-	M 13
30	F005171	SEALING WASHER	1		
..	F069240	SEAL KIT	1		INCL. ITEMS 5, 9, 11, 17, 21, 24, 25

CONTROL VALVE FEED WHEEL BLOCK

WJTF2010 -UN-29JUN04

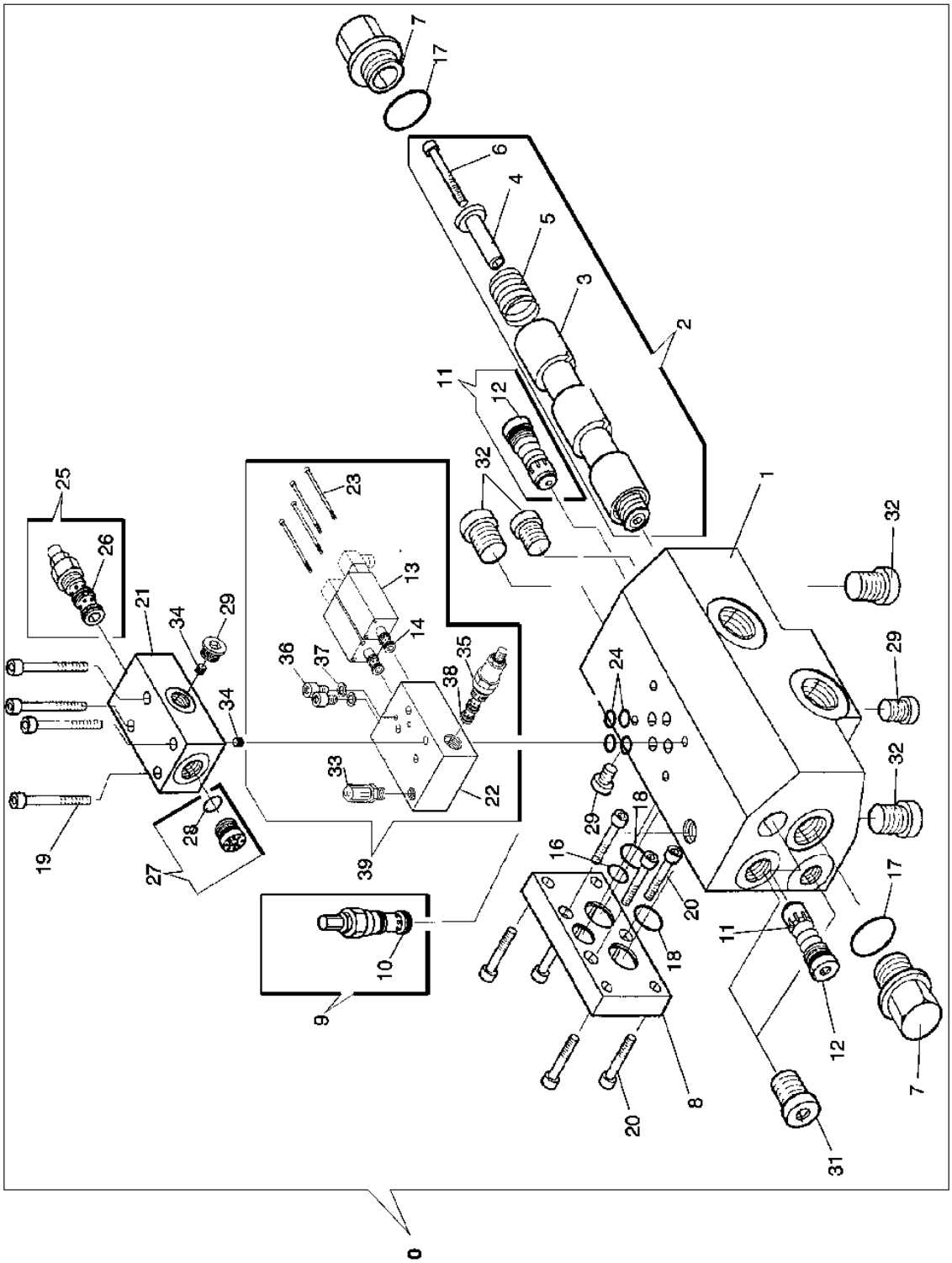

TF2010

THIS PARTS LISTING IS CONTINUED

CONTROL VALVE FEED WHEEL BLOCK

KEY	PART NO.	PART NAME	QTY	SERIAL NO.	REMARKS
0	F049328	VALVE STACK	1		FEEDING WHEEL BLOCK
1	F048342	MANIFOLD	1		
2	F058047	SPOOL	1		INCL. 3-6
3	F056528	SOLENOID VALVE COIL	1		
4	F048994	STRUCTURAL TUBING	2		
5	F048993	SPRING	2		
6	F048992	SCREW	2		
7	F048340	PLUG	2		
8	F018792	PLATE	1		
9	F048339	RELIEF VALVE	1		INCL. 10
10	F033364	SEAL KIT	1		
11	F018794	VALVE	2		INCL. 12, 260 BAR
	F060137	PRESSURE RELIEF VALVE	2		350 BAR
12	F004571	O-RING	2		
13	F018795	HYD ACTUATED CONTROL VALVE	2		
14	F022078	SEAL KIT	2		
16	F018768	O-RING	1		
17	F018796	O-RING	2		
18	F021688	O-RING	2		
19	F003147	BOLT	4		
20	F010537	BOLT	7		
21	F059611	SPOOL VALVE	1	1072-	
	F059842	JUNCTION BLOCK	1	544-1071	
22	F060358	VALVE STACK	1		
23	F063643	CAP SCREW	4		
24	F003286	O-RING	5		
25	F046419	HYDRAULIC PRESSURE VALVE	1		INCL. 26
26	F021587	SEAL KIT	1		
27	F008631	VALVE	1		INCL. 28
28	F021605	O-RING	1		
29	F018111	PLUG	3		
31	F005570	PLUG	2		
32	F018067	PLUG	4		
33	F057716	FITTING	1		
34	F054478	SCREW	2		
35	F021599	VALVE	1		
36	F060359	CAP SCREW	2		
37	F016317	SEAL	2		
38	F021600	SEAL KIT	2		
39	F060206	HOUSING	1		
..	F069237	SEAL KIT	1		INCL. ITEM 10, 12, 14, 16-18, 24, 38

CONTROL VALVE ROTATOR VALVE

WJTF2252 -UN-01JUN01

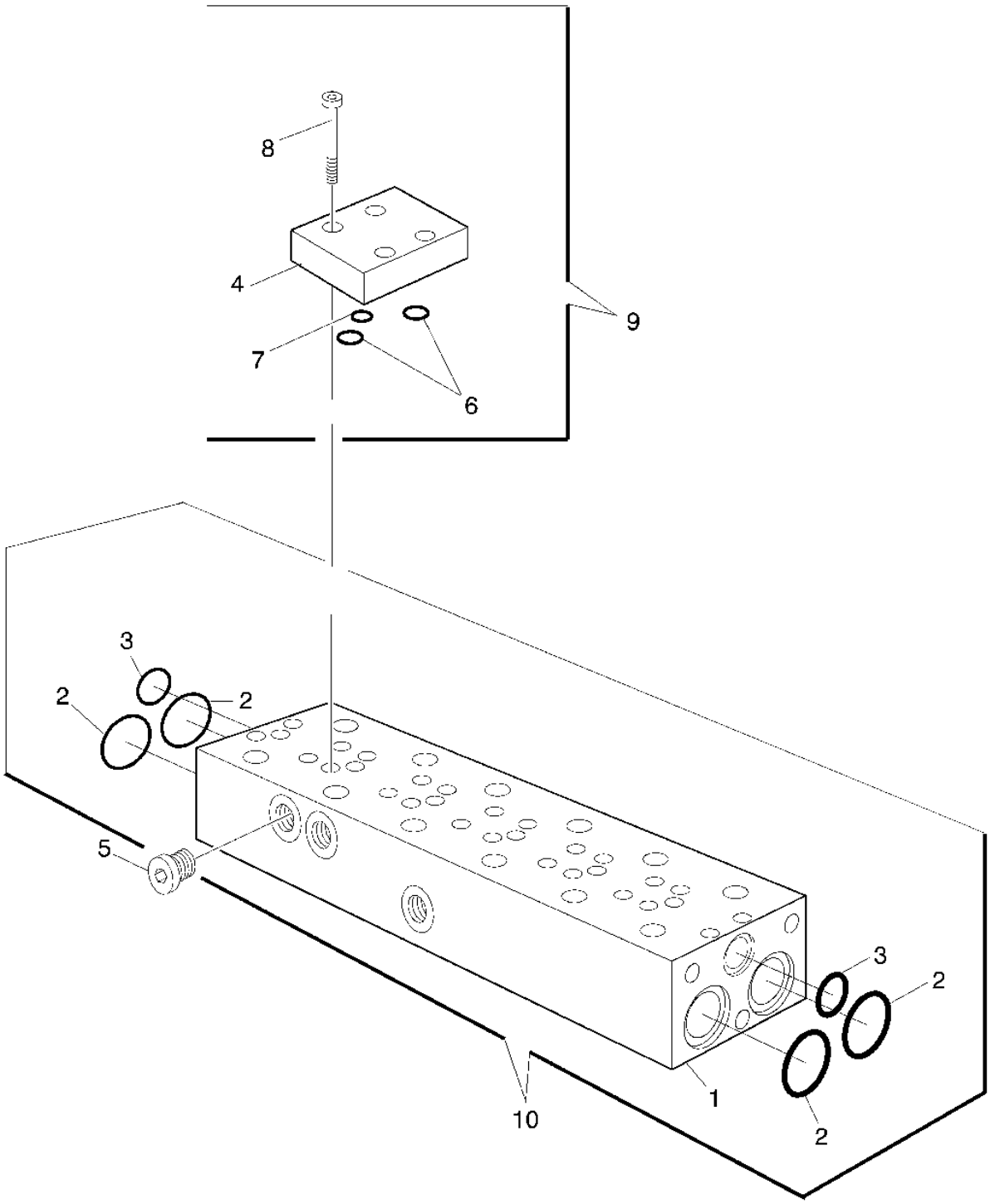

TF2252

THIS PARTS LISTING IS CONTINUED

CONTROL VALVE ROTATOR BLOCK

KEY	PART NO.	PART NAME	QTY	SERIAL NO.	REMARKS
1	F048335	MANIFOLD	1		
2	F008449	O-RING	4		
3	F018768	O-RING	2		
4	F018112	PLUG	2		
5	F018778	PLATE	1		
6	F018771	O-RING	2		
7	F003285	O-RING	1		
8	F010828	BOLT	4		
9	F028408	COVER	1		SEE PAGE 4462-16
10	F047626	JUNCTION BLOCK	1		
..	F069241	SEAL KIT	1		INCL. ITEMS 2, 3

CONTROL VALVE CUTTING DEVICE BLOCK

WJTF1009 -UN-14JUN05

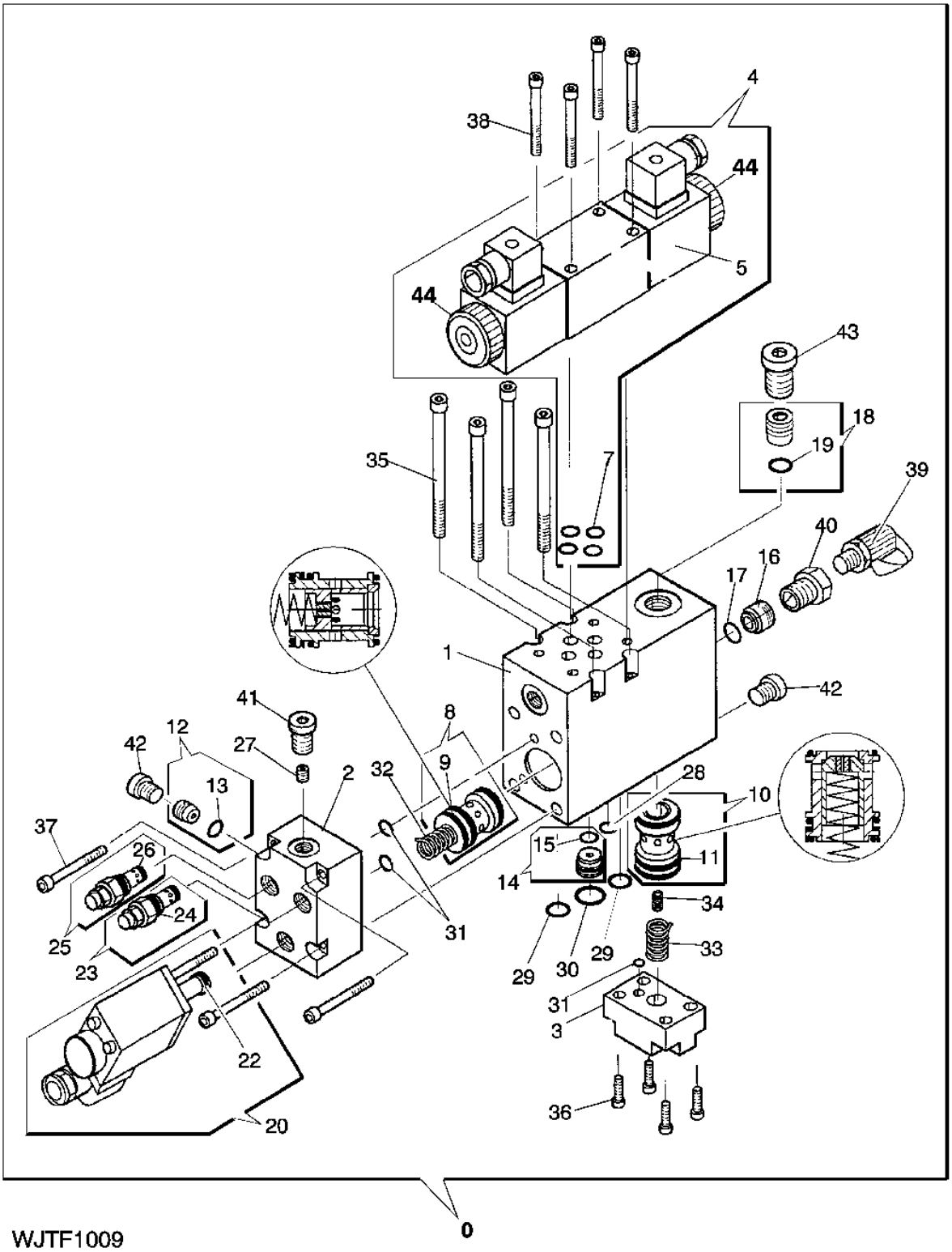

WJTF1009

THIS PARTS LISTING IS CONTINUED

CONTROL VALVE CUTTING DEVISE BLOCK

KEY	PART NO.	PART NAME	QTY	SERIAL NO.	REMARKS
0	F028405	VALVE STACK	1		INCL. ITEMS 1-44
1	F018801	MANIFOLD	1		
2	F018802	COVER	1		
3	F018812	COVER	1		
4	F011349	VALVE	1		INCL. ITEMS 5, 7, 44
5	F054657	SOLENOID	2		
7	F003286	O-RING	4		
8	F018805	FILTER	1		INCL. 9
9	F018824	SEAL KIT	1		
10	F008640	RELIEF VALVE	1		INCL. 11
11	F018824	SEAL KIT	1		
12	F008631	VALVE	1		INCL. 13
13	F021605	O-RING	1		
14	F018776	VALVE	1		INCL. 15
15	F021607	O-RING	1		
16	F018813	VALVE	1		
17	F021609	O-RING	1		
18	F018814	VALVE	1		INCL. 19
19	F021609	O-RING	1		
20	F056206	RELIEF VALVE	1		INCL. 22
22	F018827	SEAL KIT	1		
23	F018807	PRESSURE RELIEF VALVE	1		INCL. 24
24	F021614	SEAL KIT	1		
25	F018808	VALVE	1		INCL. 26
26	F021614	SEAL KIT	1		
27	F018787	RESTRICTOR	1		
28	F003285	O-RING	1		
29	F018771	O-RING	2		
30	F018768	O-RING	1		
31	F018772	O-RING	3		
32	F008639	SPRING	1		
33	F018815	SPRING	1		
34	F038710	SPRING	1		
35	F018811	BOLT	4		
36	F010749	BOLT	4		
37	F010828	BOLT	4		
38	F003393	CAP SCREW	4		
39	F025711	FITTING	1		
40	F004277	ELECTRICAL CONNECTOR ASSY	1		
41	F011293	PLUG	1		
42	F018111	PLUG	2		
43	F005570	PLUG	1		
44	F056643	NUT	2		FOR DENISON VALVE
	F055043	NUT	2		FOR VICKERS VALVE
..	F069239	SEAL KIT	1		INCL. ITEMS 7,9,11,13,15,17,19,22,24,26,28-31

CONTROL VALVE ARM BLOCK

WJTF1033 -UN-14JUN05

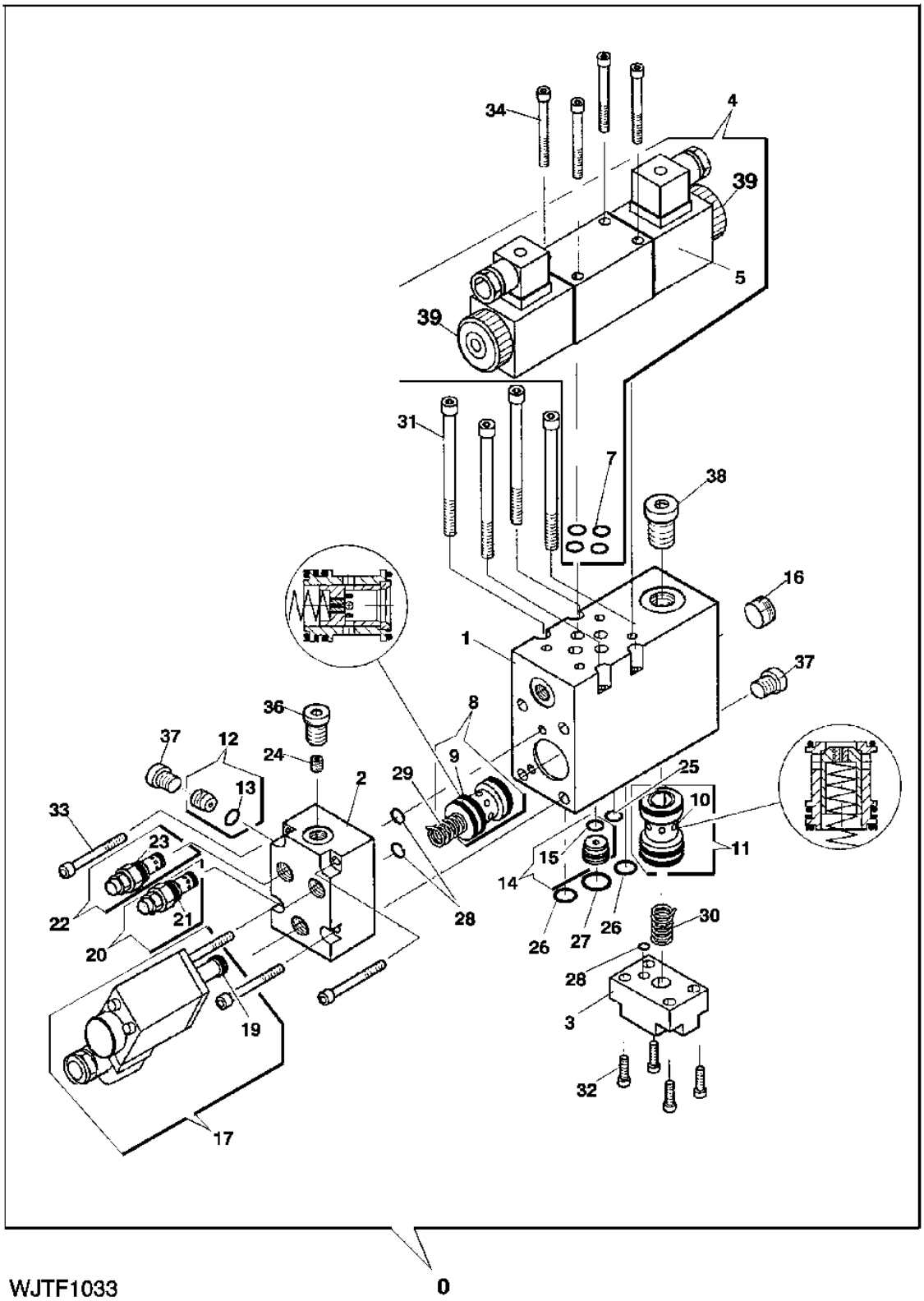

THIS PARTS LISTING IS CONTINUED

CONTROL VALVE ARM BLOCK

KEY	PART NO.	PART NAME	QTY	SERIAL NO.	REMARKS
0	F028407	HOUSING	1		INCL. ITEMS 1-39
1	F018801	MANIFOLD	1		
2	F018802	COVER	1		
3	F018803	COVER	1		
4	F011349	VALVE	1		INCL. ITEMS 5, 7, 39
5	F054657	SOLENOID	2		
7	F003286	O-RING	4		
8	F018805	FILTER	1		INCL. 9
9	F018824	SEAL KIT	1		
10	F024819	VALVE	1		INCL. 11
11	F018824	SEAL KIT	1		
12	F008631	VALVE	1		INCL. 13
13	F021605	O-RING	1		
14	F018776	VALVE	1		INCL. 15
15	F021607	O-RING	1		
16	F048327	PLUG	1		
17	F056206	RELIEF VALVE	1		INCL. 19
19	F018827	SEAL KIT	1		
20	F018807	PRESSURE RELIEF VALVE	1		INCL. 21
21	F021614	SEAL KIT	1		
22	F018807	PRESSURE RELIEF VALVE	1		INCL. 23
23	F021614	SEAL KIT	1		
24	F018787	RESTRICTOR	1		
25	F003285	O-RING	1		
26	F018771	O-RING	2		
27	F018768	O-RING	1		
28	F018772	O-RING	3		
29	F008639	SPRING	1		
30	F018810	SPRING	1		
31	F018811	BOLT	4		
32	F010749	BOLT	4		
33	F010828	BOLT	4		
34	F008644	CAP SCREW	4		
36	F011293	PLUG	1		
37	F018111	PLUG	2		
38	F005570	PLUG	1		
39	F056643	NUT	2		FOR DENISON VALVE
	F055043	NUT	2		FOR VICKERS VALVE
..	F069239	SEAL KIT	1		INCL. ITEMS 7,9,11,13,15,19,21,23,25-28

CONTROL VALVE TILT BLOCK

WJTF1011 -UN-14JUN05

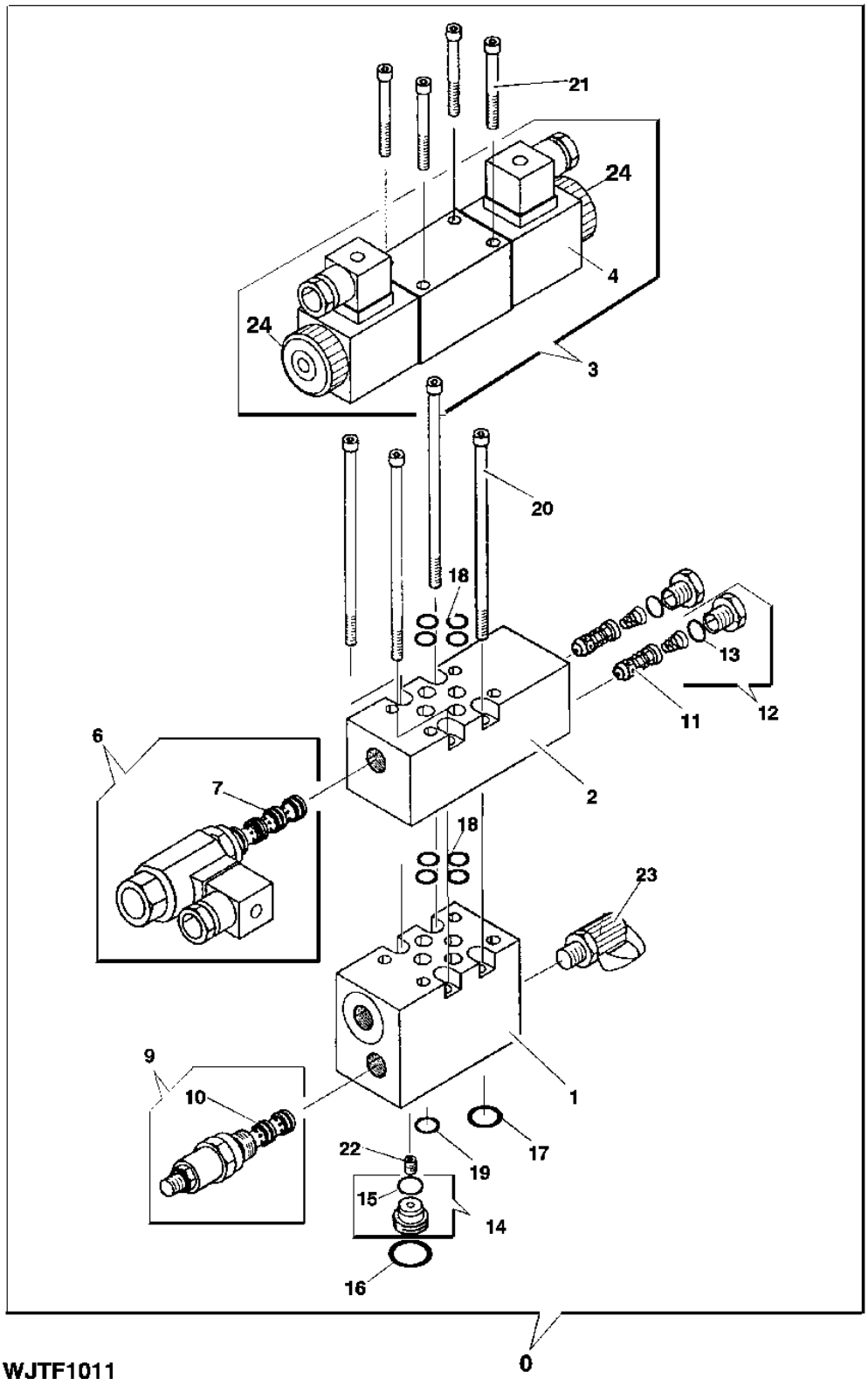

WJTF1011

THIS PARTS LISTING IS CONTINUED

CONTROL VALVE TILT BLOCK

KEY	PART NO.	PART NAME	QTY	SERIAL NO.	REMARKS
0	F054218	MANIFOLD	1		INCL. 1-24
1	F018773	MANIFOLD	1		
2	F035765	MANIFOLD	1		
3	F011349	VALVE	1		INCL. ITEMS 4, 24
4	F054657	SOLENOID	2		
6	F035766	SOLENOID HYDRAULIC VALVE	1		INCL. 7
7	F039180	SEAL KIT	1		
9	F046811	HYDRAULIC PRESSURE VALVE	1	-XXXX	INCL. 10
	F018775	HYDRAULIC PRESSURE VALVE	1	XXXX-	
10	F048971	SEAL KIT	1		
11	F011344	FILTER	2		
12	F017718	PLUG	2		INCL. 13
13	F021653	O-RING	2		
14	F018776	VALVE	1		INCL. 15
15	F021607	O-RING	1		
16	F018768	O-RING	1		
17	F018771	O-RING	1		
18	F003286	O-RING	8		
19	F003285	O-RING	1		
20	F032093	BOLT	4		
21	F008644	CAP SCREW	1		
22	F024840	RESTRICTOR	1		
23	F025711	FITTING	1		
24	F056643	NUT	2		FOR DENISON VALVE
	F055043	NUT	2		FOR VICKERS VALVE
..	F069238	SEAL KIT	1		INCL. ITEM 7, 10, 13, 15-19

ROTATOR BLOCK

WJTF2405 -19-22NOV02

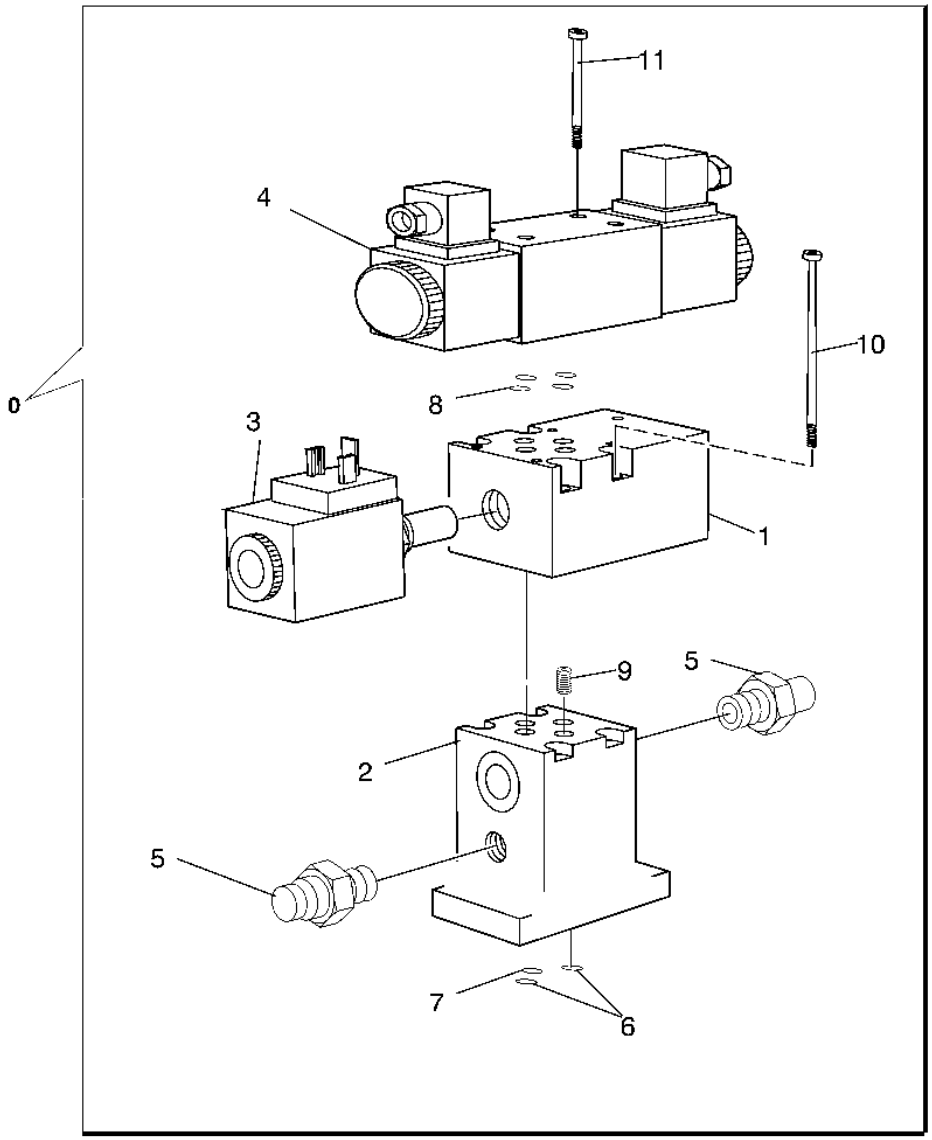

TF2405

THIS PARTS LISTING IS CONTINUED

ROTATOR BLOCK
OPTIONAL EQUIPMENT

KEY	PART NO.	PART NAME	QTY	SERIAL NO.	REMARKS
0	F048973	JUNCTION BLOCK	1		INCL. POS. 1...11
1	F043609	MANIFOLD	1		
2	F018779	MANIFOLD	1		
3	F035766	SOLENOID HYDRAULIC VALVE	1		
	F039180	SEAL KIT	1		INCL. IN POS. 3
4	F011349	VALVE	1		
5	F018781	VALVE	2		
	F033366	SEAL KIT	1		
6	F018771	O-RING	2		
7	F003285	O-RING	1		
8	F003286	O-RING	4		
9	F031278	BOLT	1		
10	F032093	BOLT	4		
11	F010685	CAP SCREW	4		

VALVE BLOCK, CHAIN TIGHTENER, OPTION

WJTF2353 -UN-17MAY05

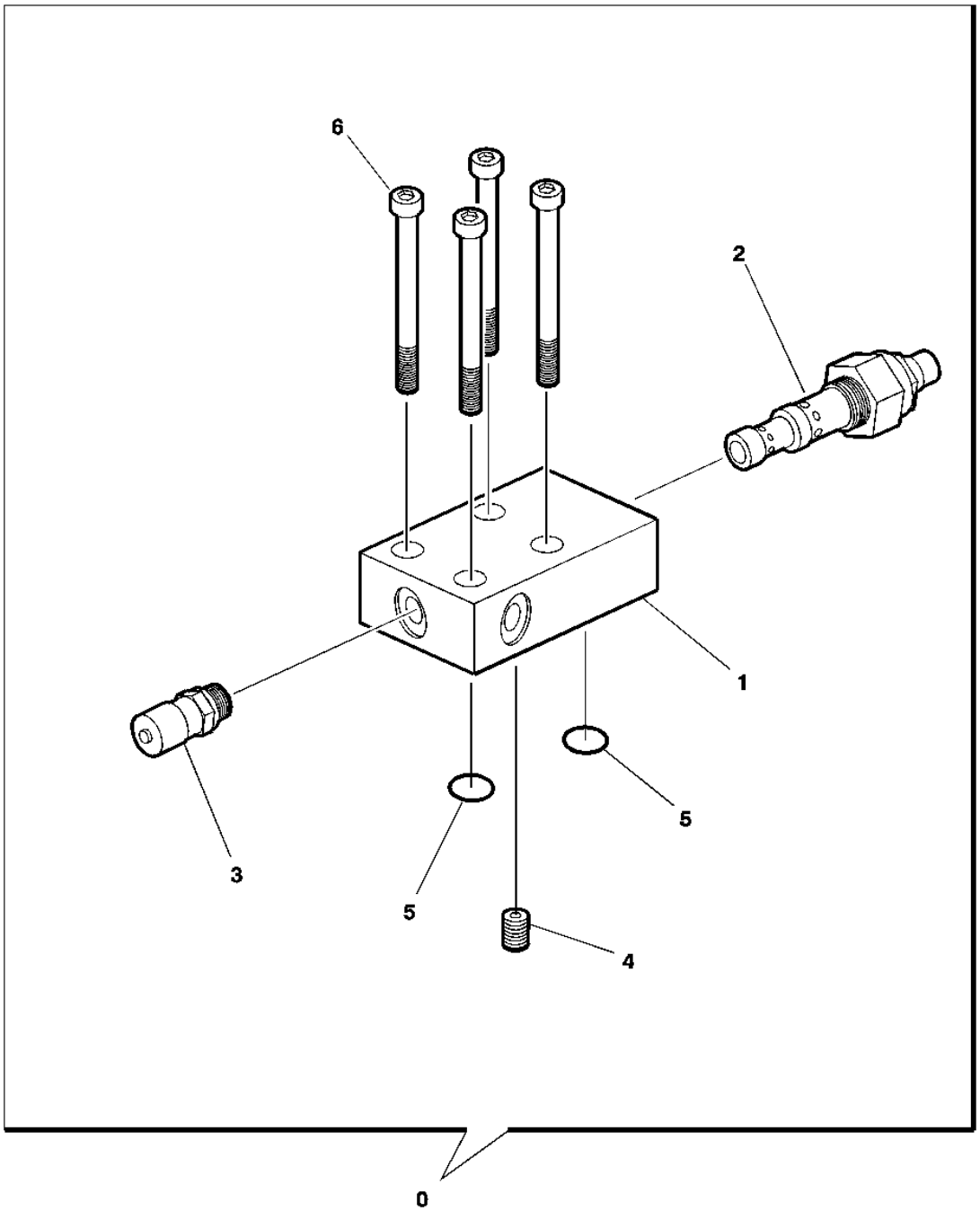

WJTF2353

E22

VALVE BLOCK, CHAIN TIGHTENER

KEY	PART NO.	PART NAME	QTY	SERIAL NO.	REMARKS
0	F061407	MANIFOLD	1		INCL ITEMS 1-6
1	F062484	MANIFOLD	1		
2	F062483	PRESSURE RELIEF VALVE	1		
3	F057716	FITTING	1		
4	F062482	ORIFICE	1		
5	F003286	O-RING	2		
6	19M8674	SCREW	4		M5 X 85

TILT CYLINDER AND REPAIR KIT
...WHH260X001382

WJTF1038 -UN-01JUN01

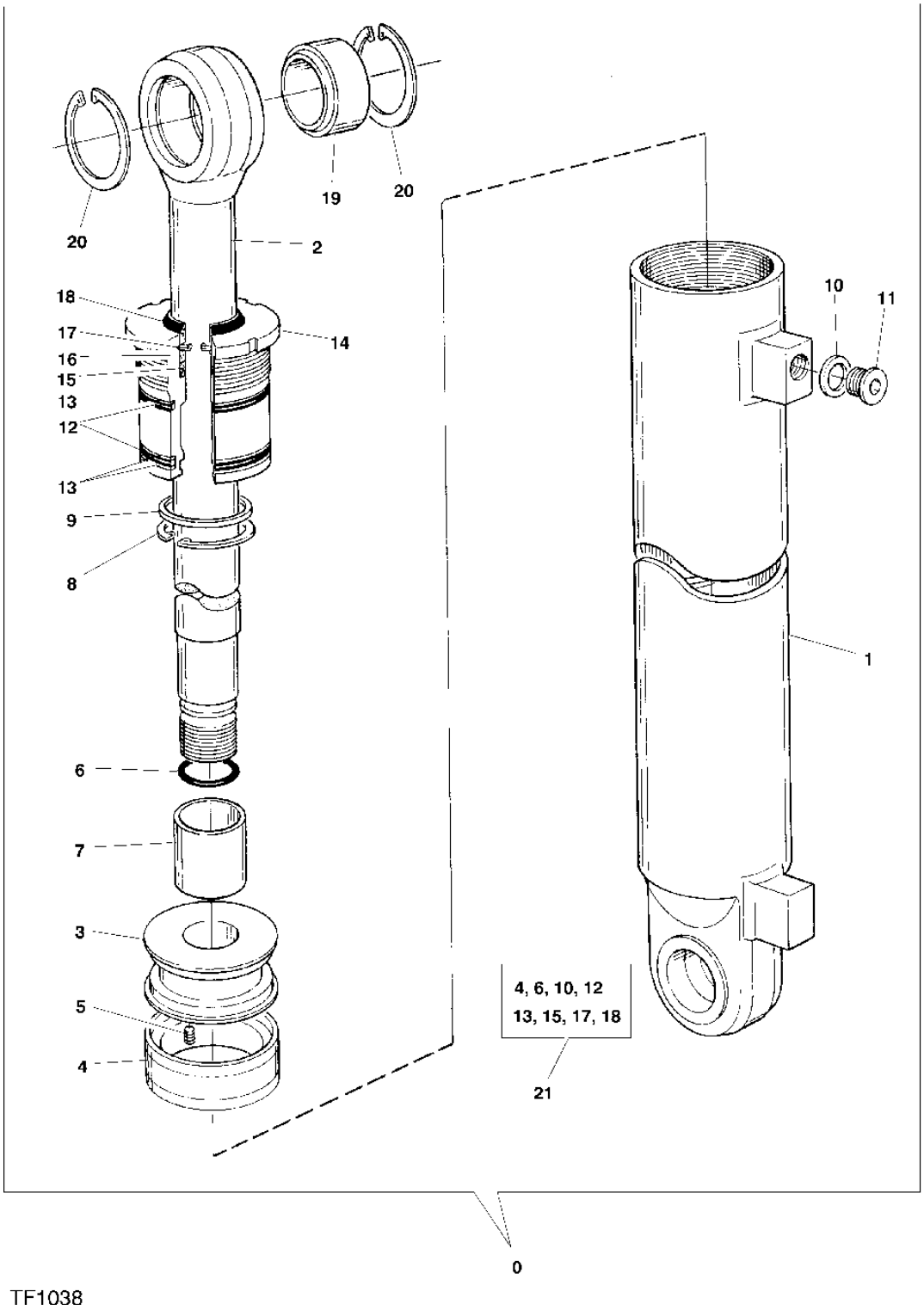

TF1038

THIS PARTS LISTING IS CONTINUED

TILT CYLINDER AND REPAIR KIT
...WHH260X001382

KEY	PART NO.	PART NAME	QTY	SERIAL NO.	REMARKS
0	F029982	CYLINDER	1		
1	F033862	HYDRAULIC CYLINDER BARREL	1		
2	F019065	ROD	1		
3	F005612	PISTON	1		
4	.....	GASKET	1		
5	F011446	BOLT	1		
6	.....	O-RING	1		
7	F019064	RING	1		
8	F019070	CLIP	1		
9	F019067	RING	1		
10	.....	SEALING WASHER	1		
11	F003382	PLUG	1		
12	.....	O-RING	2		
13	.....	BACK-UP RING	3		
14	F019068	GUIDE	1		
15	.....	GASKET	1		
16	F015740	RING	1		
17	.....	SNAP RING	1		
18	.....	SCRAPER RING	1		
19	F003818	BEARING	2		
20	F003370	CLIP	4		
21	F019069	SEAL KIT	1		INCL. POS. 4, 6, 10, 12,

TILT CYLINDER
WHH260X001383...

WJTF2802 -UN-12NOV02

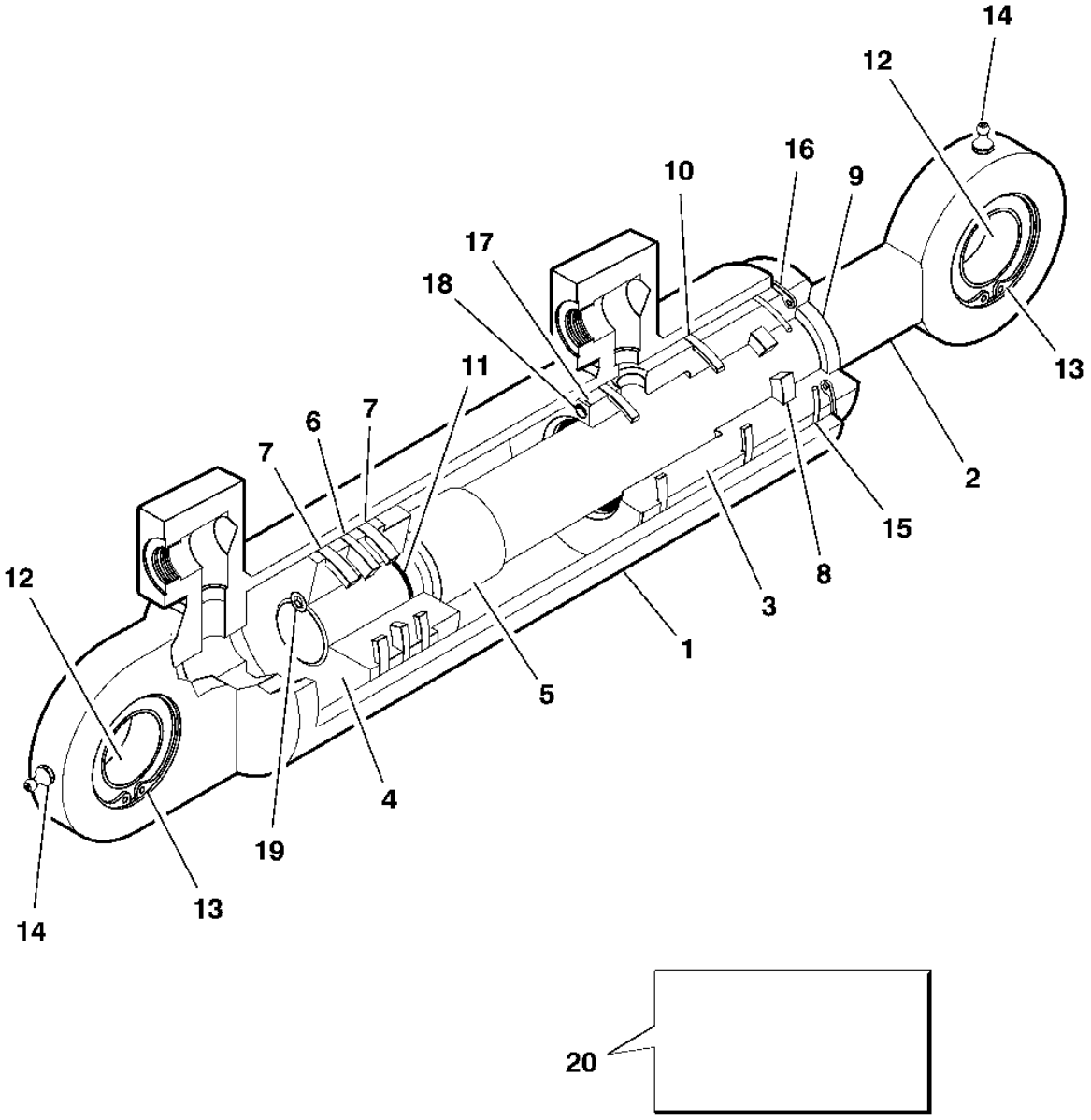

TF2802

TILT CYLINDER
WHH260X001383...

KEY	PART NO.	PART NAME	QTY	SERIAL NO.	REMARKS
0	F062196	HYDRAULIC CYLINDER	1		INCLUDING ITEM 1...19
1	F064466	HYDRAULIC CYLINDER BARREL	1		
2	F064467	ROD	1		
3	F064468	HYDR. CYLINDER ROD GUIDE	1		
4	F064469	PISTON	1		
5	F033049	HYDRAULIC CYLINDER ROD	1		
6	.....	SEAL	1		
7	.....	RING	2		
8	.....	SEAL	1		
9	.....	SCRAPER RING	1		
10	.....	O-RING	3		
11	.....	O-RING	1		
12	F003818	BEARING	2		
13	F003370	CLIP	2		
14	F003727	LUBRICATION FITTING	2		
15	F064470	WIRE	1		
16	F002832	SNAP RING	1		
17	F013607	BALL	1		
18	34M7159	SPRING PIN	1		
19	F007556	SET SCREW	1		
20	F063021	SEAL KIT	AR		

SAW CYLINDER
...WHH260X001382

WJTF1209 -UN-05APR05

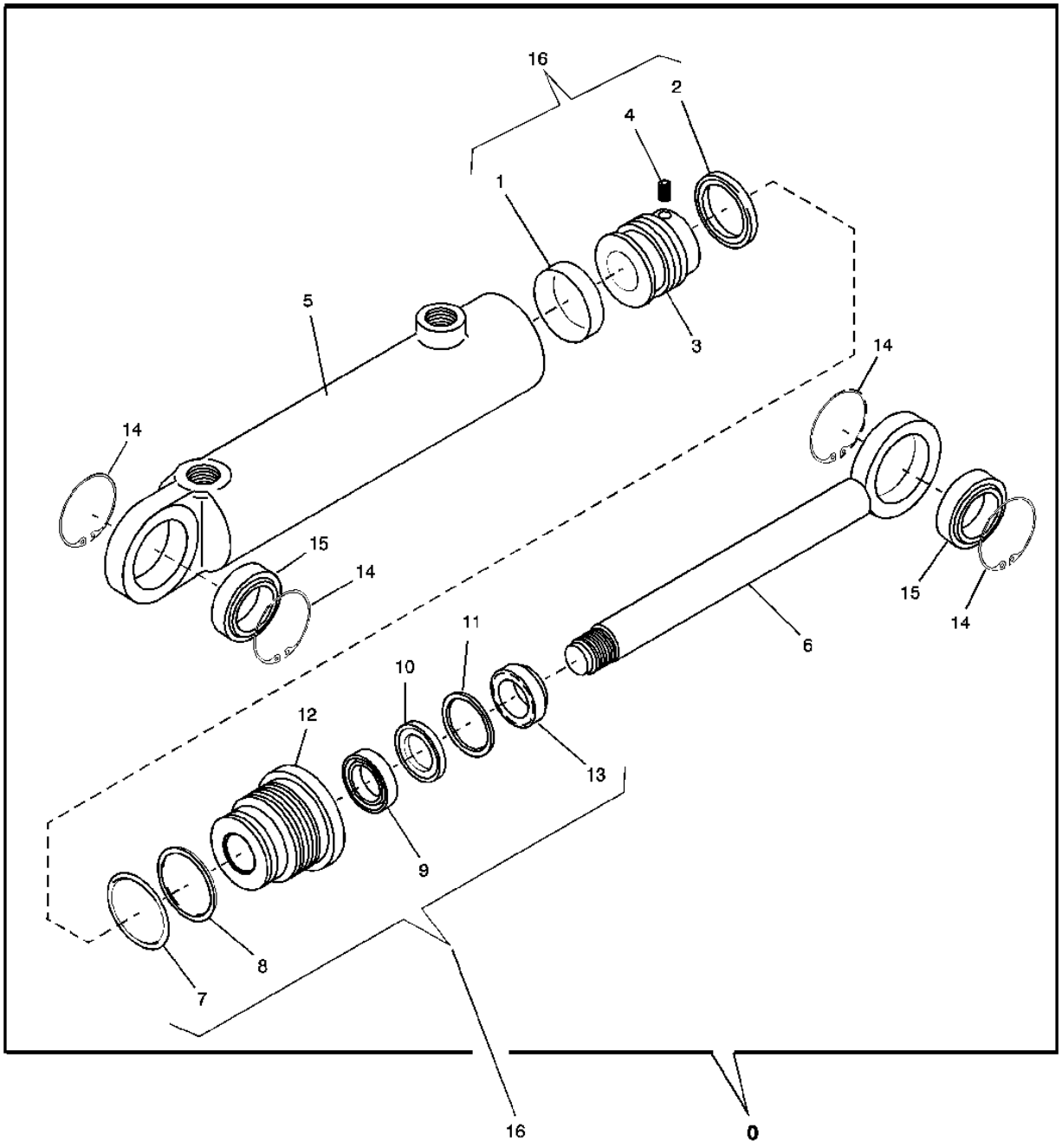

TF1209

SAW CYLINDER
...WHH260X001382

KEY	PART NO.	PART NAME	QTY	SERIAL NO.	REMARKS
0	F051120	HYDRAULIC CYLINDER	1		INCL. POS. 1-15
1	.....	GUIDE	1		
2	.....	GASKET	1		
3	F054706	PISTON	1		
4	.....	SCREW	1		
5	F054707	TUBE	1		
6	F054704	ROD	1		
7	.....	O-RING	1		
8	.....	BACK-UP RING	1		
9	.....	GASKET	1		
10	F045029	WASHER	1		
11	F004762	SNAP RING	1		
12	F045000	SUPPORT	1		
13	.....	SCRAPER	1		
14	F003369	SNAP RING	4		
15	F005468	BEARING	2		
16	F054703	SEAL KIT	1		INCL. POS. 1,2,4,7-9,13

SAW CYLINDER
WHH260X001383...

WJTF2679 -UN-07JAN03

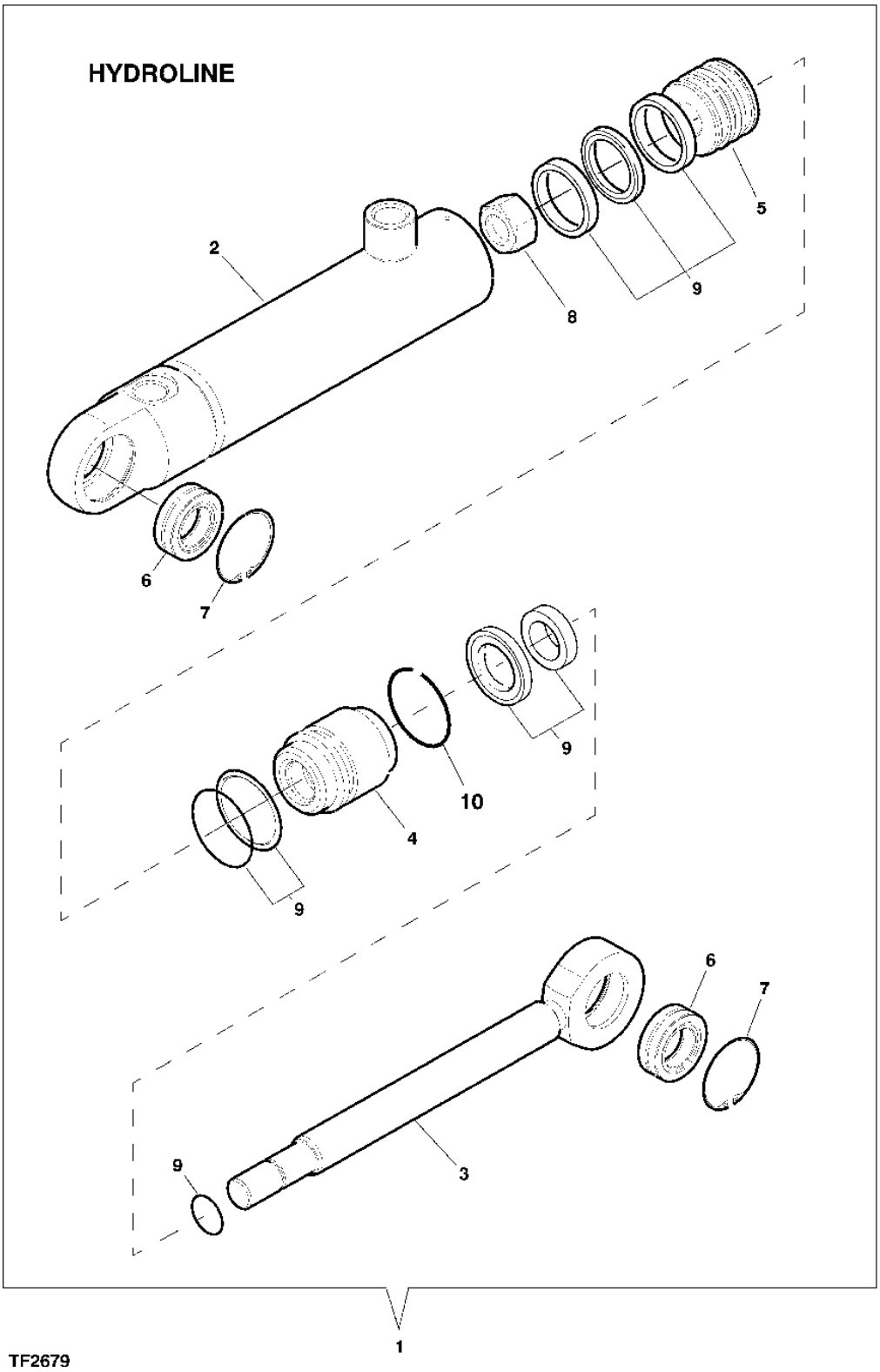

TF2679

THIS PARTS LISTING IS CONTINUED

SAW CYLINDER
WHH260X001383...

KEY	PART NO.	PART NAME	QTY	SERIAL NO.	REMARKS
1	F062198	HYDRAULIC CYLINDER	1		
2	F064182	HYDRAULIC CYLINDER BARREL	1		
3	F064181	HYDRAULIC CYLINDER ROD	1		
4	F064180	GUIDE	1		
5	F064179	PISTON	1		
6	F003818	BEARING	2		
7	F003369	SNAP RING	2		
8	F003591	LOCK NUT	1		
9	F064045	SEAL KIT	AR		
10	F064474	RING	1		

FEED ROLLS CYLINDER AND SEAL KITS
...WHH260X001382

WJT0818 -UN-01JUN01

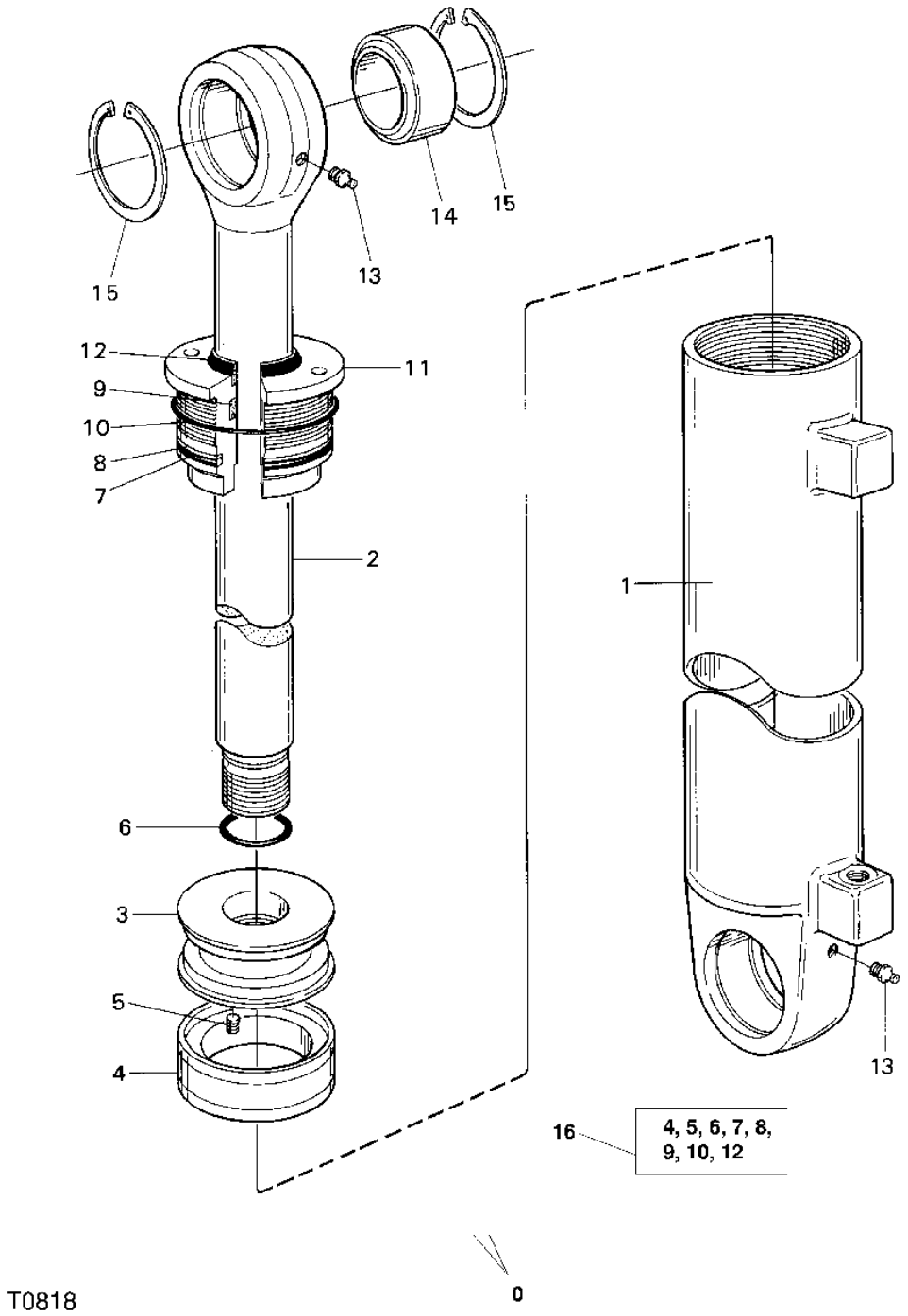

THIS PARTS LISTING IS CONTINUED

FEED ROLLS CYLINDER AND SEAL KIT
...WHH260X001382

KEY	PART NO.	PART NAME	QTY	SERIAL NO.	REMARKS
0	F017736	CYLINDER	1		
1	F019062	HOUSING	1		
2	F019063	ROD	1		
3	F011469	PISTON	1		
4	.....	GASKET	1		
5	.....	SCREW	1		
6	.....	O-RING	1		
7	.....	O-RING	1		
8	.....	BACK-UP RING	1		
9	.....	GASKET	1		
10	.....	O-RING	1		
11	F011472	GUIDE	1		
12	.....	SCRAPER	1		
13	F003727	LUBRICATION FITTING	2		
14	F003820	BEARING	2		
15	F003373	SNAP RING	4		
16	F019061	SEAL KIT	1	INCL. POS. 4...10, 12	

FEED ROLLS CYLINDER AND SEAL KIT
WHH260X001383...

WJTF2801 -UN-11NOV02

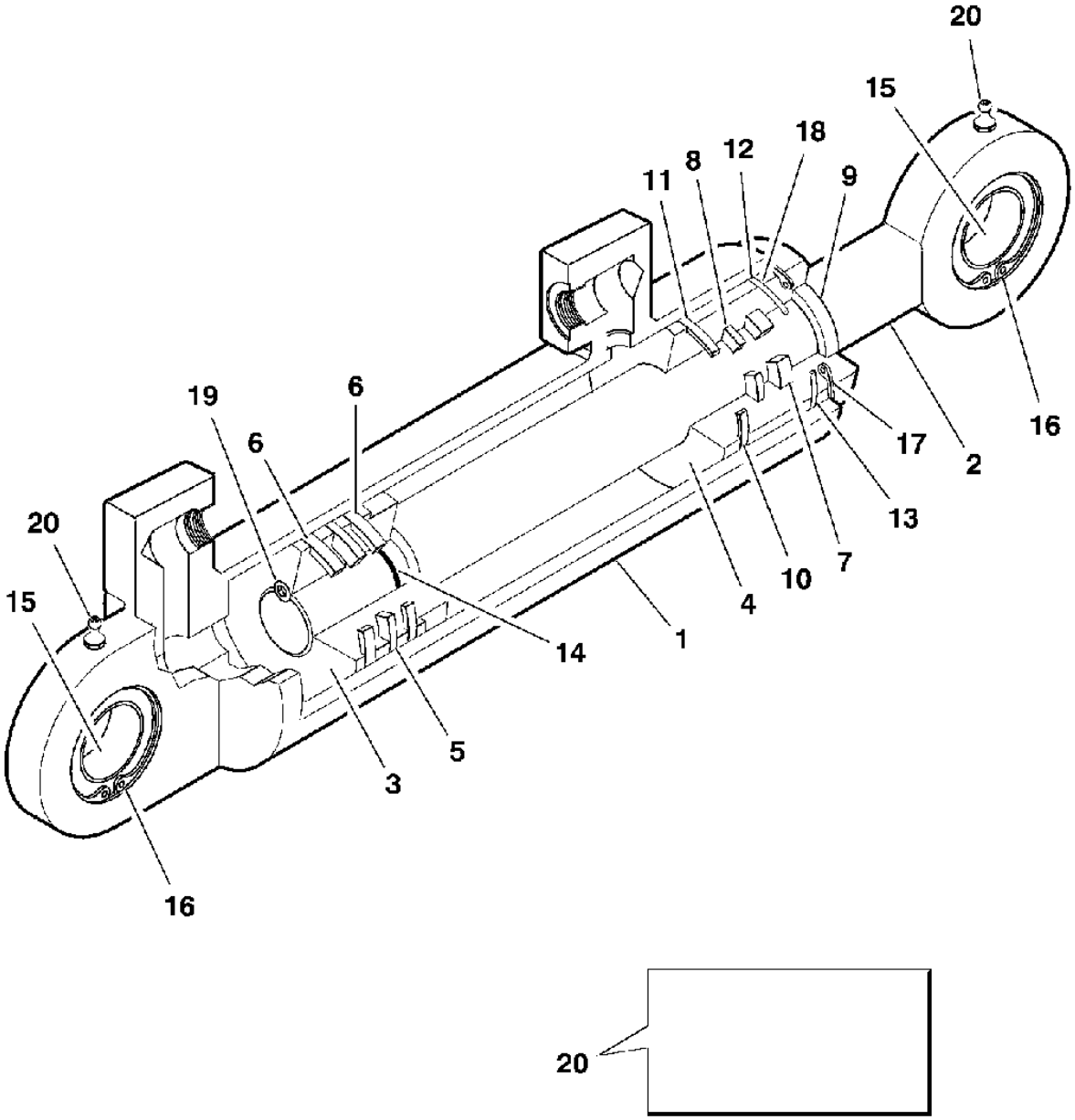

TF2801

THIS PARTS LISTING IS CONTINUED

FEED ROLLS CYLINDER AND SEAL KIT
WHH260X001383...

KEY	PART NO.	PART NAME	QTY	SERIAL NO.	REMARKS
0	F062195	HYDRAULIC CYLINDER	1		INCLUDING ITEM 1...20
1	F064462	HYDRAULIC CYLINDER BARREL	1		
2	F064463	ROD	1		
3	F064318	PISTON	1		
4	F064464	HYDR. CYLINDER ROD GUIDE	1		
5	.....	SEAL	1		
6	.....	RING	2		
7	.....	SEAL	1		
8	.....	SEAL	1		
9	.....	SCRAPER RING	1		
10	.....	O-RING	1		
11	.....	RING	1		
12	.....	O-RING	1		
13	.....	RING	1		
14	.....	O-RING	1		
15	F003820	BEARING	2		
16	F015955	SNAP RING	2		
17	F003375	SNAP RING	1		
18	F064465	RING	1		
19	F026206	SET SCREW	1		
20	F003727	LUBRICATION FITTING	2		
21	F063023	SEAL KIT	AR		

CUTTING KNIFE CYLINDER AND SEAL KIT
...WHH260X001382

WJT0775 -UN-01JUN01

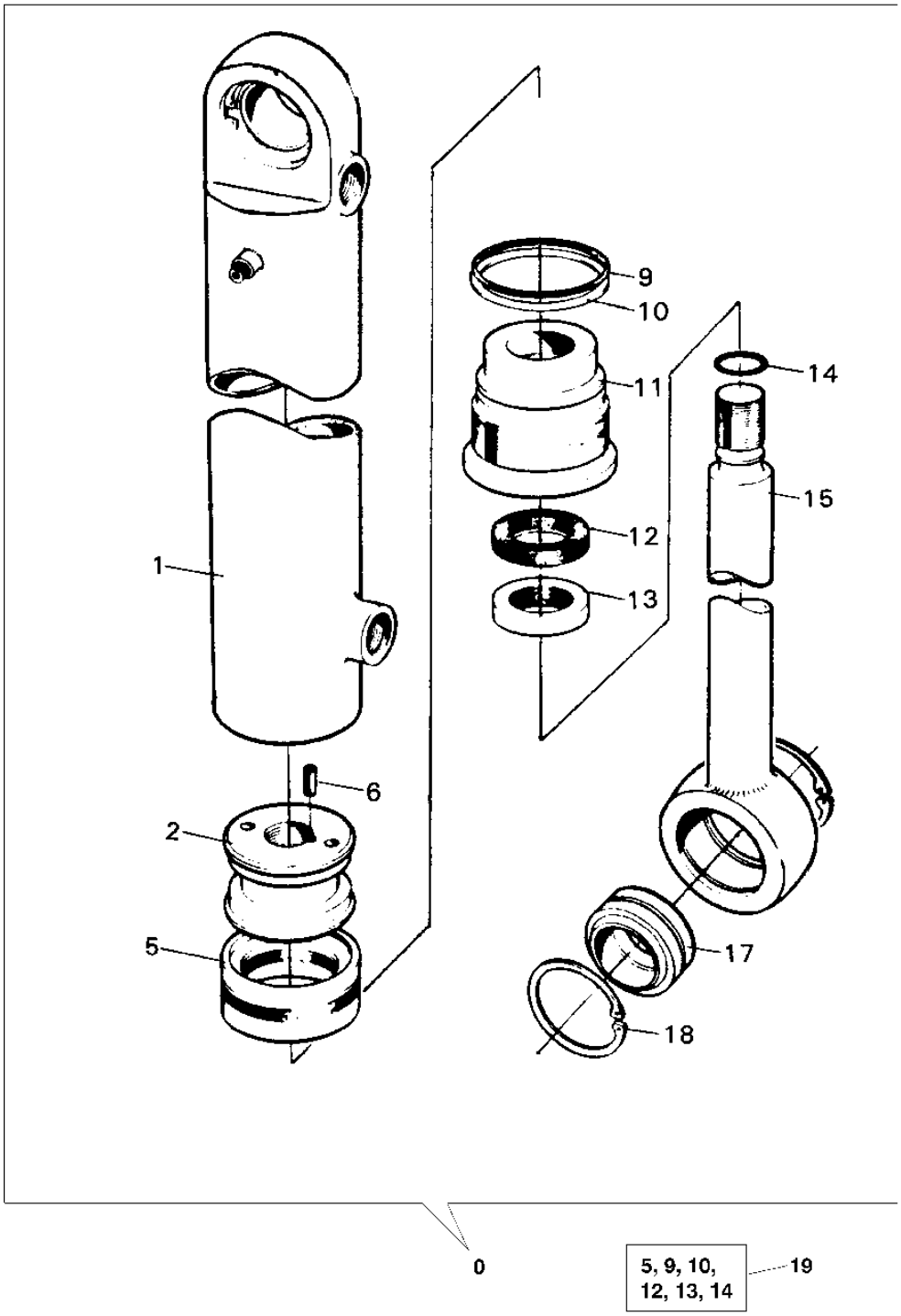

THIS PARTS LISTING IS CONTINUED

CUTTING KNIFE CYLINDER AND SEAL KIT
...WHH260X001382

KEY	PART NO.	PART NAME	QTY	SERIAL NO.	REMARKS
0	F011445	CYLINDER	1		INCL. 1-18
1	F034668	CYLINDER	1		
2	F005612	PISTON	1		
5	.....	GASKET	1		
6	F011446	BOLT	1		
9	.....	O-RING	1		
10	.....	BACK-UP RING	1		
11	F035193	GUIDE	1		
12	.....	GASKET	1		
13	.....	SCRAPER RING	1		
14	.....	O-RING	1		
15	F005453	ROD	1		
17	F003818	BEARING	2		
18	F003370	CLIP	4		
19	F005446	SEAL KIT	1		INCL. POS. 5, 9, 10,

CUTTING KNIFE CYLINDER AND SEAL KIT
WHH260X001383...

WJTF2800 -UN-13NOV02

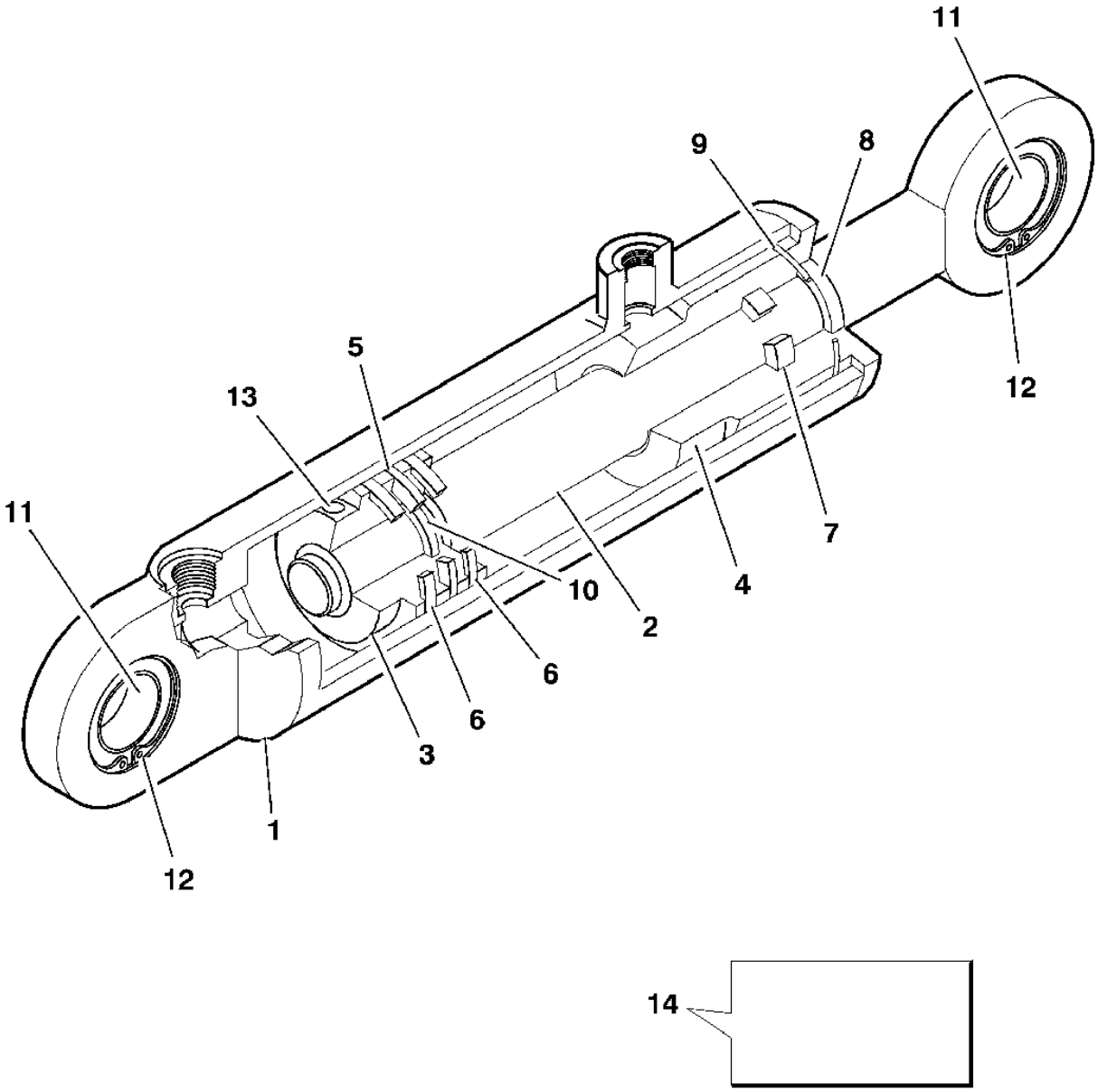

TF2800

THIS PARTS LISTING IS CONTINUED

CUTTING KNIFE CYLINDER AND SEAL KIT
WHH260X001383...

KEY	PART NO.	PART NAME	QTY	SERIAL NO.	REMARKS
0	F062194	HYDRAULIC CYLINDER	1		INCLUDING ITEM 1...13
1	F064460	HYDRAULIC CYLINDER BARREL	1		
2	F064461	ROD	1		
3	F064155	PISTON	1		
4	F064156	HYDR. CYLINDER ROD GUIDE	1		
5	.....	SEAL	1		
6	.....	RING	2		
7	.....	SEAL	1		
8	.....	SCRAPER RING	1		
9	.....	O-RING	1		
10	.....	O-RING	1		
11	F003818	BEARING	2		
12	F003370	CLIP	2		
13	F012758	SCREW	1		
14	F063022	SEAL KIT	AR		INCLUDING ITEM 5...10

MEASURING ROLL CYLINDER AND SEAL KIT
...WHH260X001382

WJT0474 -UN-01JUN01

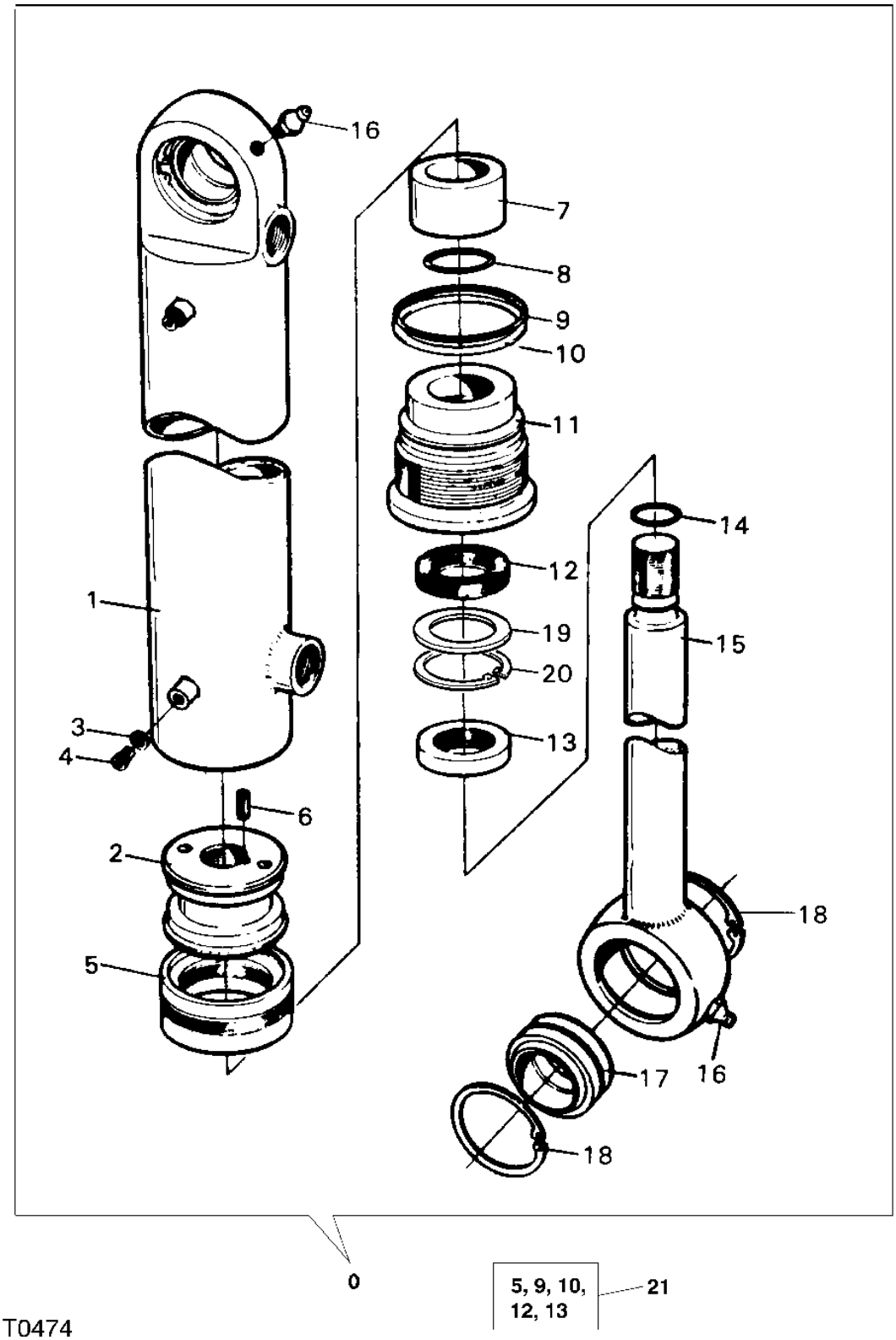

THIS PARTS LISTING IS CONTINUED

MEASURING ROLL CYLINDER AND SEAL KIT
...WHH260X001382

KEY	PART NO.	PART NAME	QTY	SERIAL NO.	REMARKS
0	F005553	CYLINDER	1		
1	F034653	TUBE	1		
2	F011459	PISTON	1		
3	F010079	SLEEVE FITTING	1		
4	F016496	CAP SCREW	1		
5	.....	GASKET	1		
7	F035195	COVER	1		
9	.....	O-RING	1		
10	.....	BACK-UP RING	1		
11	F035190	RING	1		
12	.....	GASKET	1		
13	.....	SCRAPER RING	1		
15	F011458	ROD	1		
16	F003727	LUBRICATION FITTING	2		
17	F005471	BEARING	2		
18	F005613	RING	4		
19	F005614	RING	1		
20	F005509	RING	1		
21	F003149	SEAL KIT	1		INCL. POS. 5, 9, 10,

MEASURING ROLL AND SEAL KIT
WHH260X001383...

WJTF2803 -UN-12NOV02

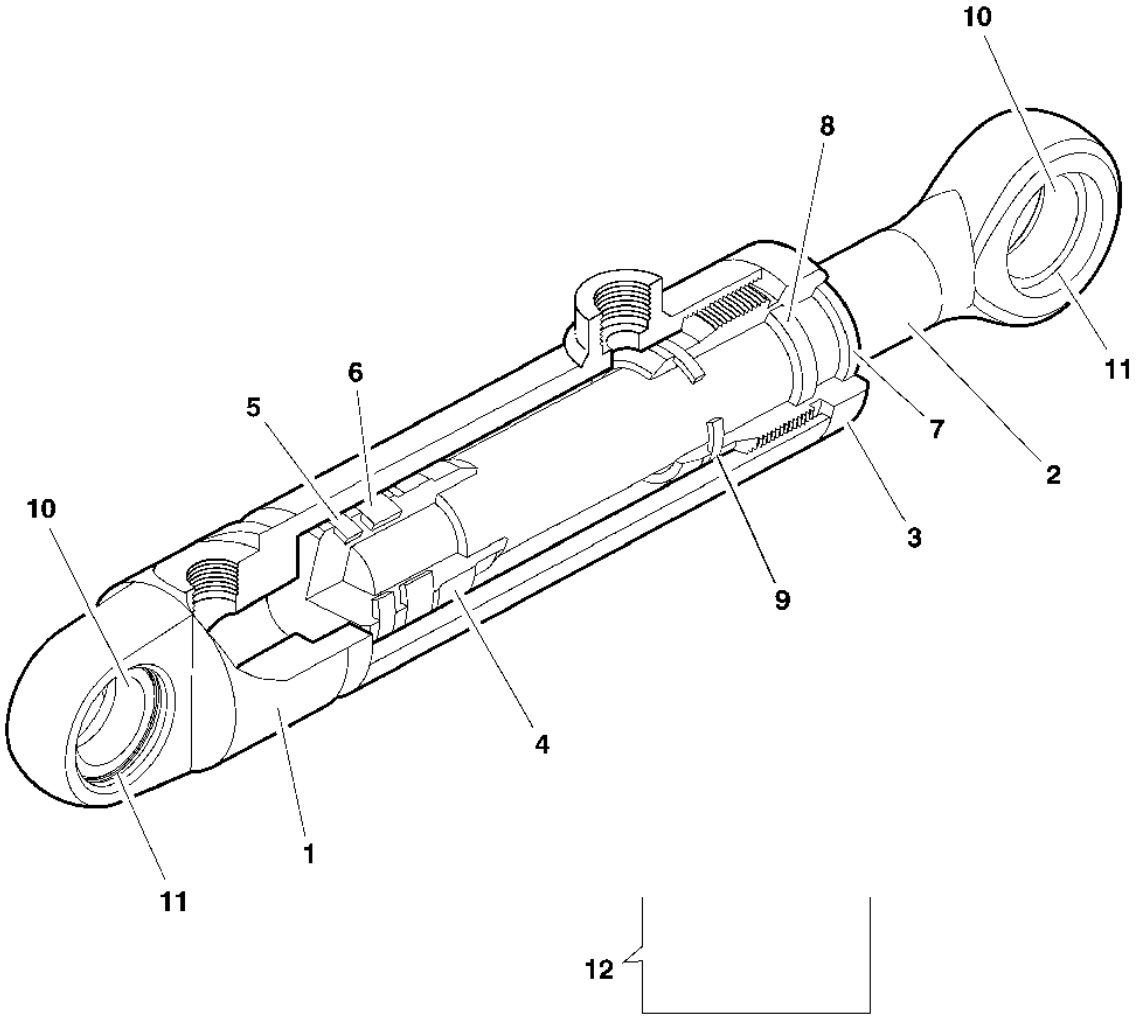

TF2803

THIS PARTS LISTING IS CONTINUED

MEASURING ROLL AND SEAL KIT
WHH260X001383...

KEY	PART NO.	PART NAME	QTY	SERIAL NO.	REMARKS
0	F062197	HYDRAULIC CYLINDER	1		INCLUDING ITEM 1...11
1	F064471	HYDRAULIC CYLINDER BARREL	1		
2	F064472	ROD	1		
3	F064473	HYDR. CYLINDER ROD GUIDE	1		
4	F064287	PISTON	1		
5	.....	SEAL	1		
6	.....	RING	1		
7	.....	SCRAPER RING	1		
8	.....	SEAL	1		
9	.....	O-RING	1		
10	F005471	BEARING	2		
11	F035344	SNAP RING	1		
12	F063020	SEAL KIT	AR		

MEMORANDA

L19

NUMERICAL INDEX

PART NO.	GRID	KEY	PAGE
F002805	A21	69	4440 - 9
F002805	A25	69	4440 - 9D
F002805	B8	67	4440 - 17
F002805	C18	27	4460 - 15
F002805	C24	24	4460 - 19
F002805	D10	31	4460 - 29
F002805	D20	33	4460 - 37
F002832	F2	16	4465 - 5
F002903	A11	15	4440 - 3
F002903	A13	21	4440 - 3B
F002903	B4	9	4440 - 13
F002904	B4	17	4440 - 13
F002905	B4	10	4440 - 13
F002907	B4	11	4440 - 13
F002915	B4	6	4440 - 13
F003147	E10	19	4462 - 7
F003149	F16	21	4465 - 19
F003170	A17	41	4440 - 5
F003170	B6	27	4440 - 15
F003170	B8	64	4440 - 17
F003170	D14	7	4460 - 31
F003170	D16	8	4460 - 33
F003228	C6	6	4460 - 3
F003229	C6	7	4460 - 3
F003230	C6	8	4460 - 3
F003230	C6	27	4460 - 3
F003285	E6	..	4462 - 3
F003285	E8	24	4462 - 5
F003285	E12	7	4462 - 9
F003285	E14	28	4462 - 11
F003285	E16	25	4462 - 13
F003285	E18	19	4462 - 15
F003285	E20	7	4462 - 17
F003286	E6	..	4462 - 3
F003286	E8	25	4462 - 5
F003286	E10	24	4462 - 7
F003286	E14	7	4462 - 11
F003286	E16	7	4462 - 13
F003286	E18	18	4462 - 15
F003286	E20	8	4462 - 17
F003286	E22	5	4462 - 19
F003337	D4	4	4460 - 23
F003338	A17	40	4440 - 5
F003342	B4	20	4440 - 13
F003357	A15	9	4440 - 3D
F003357	A17	28	4440 - 5
F003357	A21	62	4440 - 9
F003357	A25	62	4440 - 9D
F003362	A11	12	4440 - 3
F003362	A13	24	4440 - 3B
F003369	F4	14	4465 - 7
F003369	F6	7	4465 - 9
F003370	A15	8	4440 - 3D
F003370	E24	20	4465 - 3
F003370	F2	13	4465 - 5
F003370	F12	18	4465 - 15
F003370	F14	12	4465 - 17
F003372	C6	26	4460 - 3
F003373	F8	15	4465 - 11
F003375	F10	17	4465 - 13
F003382	E24	11	4465 - 3
F003383	C6	3	4460 - 3
F003393	E14	38	4462 - 11
F003404	D16	9	4460 - 33
F003405	D2	35	4460 - 21
F003411	A17	32	4440 - 5
F003411	A19	11	4440 - 7
F003411	A23	11	4440 - 9B
F003412	B4	13	4440 - 13
F003421	C6	25	4460 - 3
F003432	B8	48	4440 - 17
F003443	B18	1	4443 - 5B
F003451	B14	21	4443 - 3
F003451	B16	24	4443 - 5
F003478	D10	20	4460 - 29
F003478	D20	36	4460 - 37
F003487	C22	10	4460 - 17
F003501	B6	28	4440 - 15
F003519	D4	3	4460 - 23
F003524	C12	22	4460 - 9
F003524	C12	34	4460 - 9
F003531	B6	16	4440 - 15
F003531	C12	36	4460 - 9
F003536	B6	34	4440 - 15
F003541	B8	64	4440 - 17
F003541	D10	30	4460 - 29
F003541	D20	32	4460 - 37
F003542	A17	37	4440 - 5
F003542	A19	2	4440 - 7
F003542	A23	2	4440 - 9B
F003542	C24	26	4460 - 19
F003542	D14	6	4460 - 31
F003542	D16	7	4460 - 33
F003554	B6	11	4440 - 15
F003554	B6	33	4440 - 15
F003564	A17	38	4440 - 5
F003564	A21	64	4440 - 9
F003564	A25	64	4440 - 9D
F003565	A11	23	4440 - 3
F003565	A13	13	4440 - 3B
F003583	A15	14	4440 - 3D
F003586	A21	67	4440 - 9
F003586	B2	32	4440 - 11
F003586	D2	36	4460 - 21
F003588	A11	17	4440 - 3
F003588	A13	9	4440 - 3B
F003588	C4	11	4450 - 3
F003588	C22	11	4460 - 17
F003590	C22	13	4460 - 17
F003591	F6	8	4465 - 9
F003592	B18	2	4443 - 5B
F003722	D14	3	4460 - 31
F003722	D16	4	4460 - 33
F003727	F2	14	4465 - 5
F003727	F8	13	4465 - 11
F003727	F10	20	4465 - 13
F003727	F16	16	4465 - 19
F003732	B20	3	4443 - 7
F003732	B22	3	4443 - 9
F003732	B24	3	4443 - 11
F003818	E24	19	4465 - 3
F003818	F2	12	4465 - 5
F003818	F6	6	4465 - 9
F003818	F12	17	4465 - 15
F003818	F14	11	4465 - 17
F003820	F8	14	4465 - 11
F003820	F10	15	4465 - 13
F003828	C6	21	4460 - 3
F003833	C6	22	4460 - 3
F004277	E14	40	4462 - 11
F004357	C18	10	4460 - 15
F004357	D2	19	4460 - 21
F004357	D10	35	4460 - 29
F004357	D20	7	4460 - 37
F004565	E6	..	4462 - 3
F004567	B4	16	4440 - 13
F004571	E10	12	4462 - 7
F004573	A19	39	4440 - 7
F004573	A23	39	4440 - 9B
F004573	B2	5	4440 - 11
F004578	E8	13	4462 - 5
F004712	A17	23	4440 - 5
F004712	A19	10	4440 - 7
F004712	A23	10	4440 - 9B
F004762	F4	11	4465 - 7
F005012	B6	37	4440 - 15
F005012	C24	23	4460 - 19
F005044	C12	27	4460 - 9
F005045	C18	7	4460 - 15
F005045	C24	17	4460 - 19
F005045	D2	21	4460 - 21
F005049	C18	11	4460 - 15
F005052	C12	24	4460 - 9
F005053	C12	26	4460 - 9
F005055	C12	35	4460 - 9
F005055	C18	20	4460 - 15
F005055	C22	17	4460 - 17
F005055	D10	4	4460 - 29
F005055	D10	42	4460 - 29
F005055	D12	3	4460 - 29B
F005055	D20	14	4460 - 37
F005055	D20	43	4460 - 37
F005055	E4	15	4460 - 45
F005057	A19	26	4440 - 7
F005057	A23	26	4440 - 9B
F005057	A25	73	4440 - 9D
F005057	B2	36	4440 - 11
F005057	C12	40	4460 - 9
F005057	C18	15	4460 - 15
F005057	D6	1	4460 - 25
F005059	D2	30	4460 - 21
F005060	C18	14	4460 - 15
F005060	C24	16	4460 - 19
F005060	D2	17	4460 - 21
F005060	D10	12	4460 - 29
F005060	D20	19	4460 - 37
F005060	E2	9	4460 - 43
F005063	C18	22	4460 - 15
F005063	C22	8	4460 - 17
F005073	D2	11	4460 - 21
F005076	A19	23	4440 - 7
F005076	A23	23	4440 - 9B
F005076	B2	33	4440 - 11
F005089	D2	29	4460 - 21
F005091	C22	5	4460 - 17
F005095	C22	7	4460 - 17
F005164	C12	41	4460 - 9
F005164	C20	4	4460 - 15B
F005166	C6	4	4460 - 3
F005166	C10	2	4460 - 7
F005166	D10	39	4460 - 29
F005166	D20	8	4460 - 37
F005167	C18	9	4460 - 15
F005167	C22	14	4460 - 17
F005167	C24	11	4460 - 19
F005167	D2	15	4460 - 21
F005168	C24	7	4460 - 19
F005170	B14	29	4443 - 3
F005170	C16	4	4460 - 13
F005171	E8	30	4462 - 5
F005334	C12	43	4460 - 9

NUMERICAL INDEX - CONTINUED

PART NO.	GRID	KEY	PAGE
F005334	C18	24	4460 - 15
F005334	D2	32	4460 - 21
F005446	F12	19	4465 - 15
F005453	F12	15	4465 - 15
F005468	F4	15	4465 - 7
F005471	F16	17	4465 - 19
F005471	F18	10	4465 - 21
F005473	A19	1	4440 - 7
F005473	A23	1	4440 - 9B
F005473	C6	0	4460 - 3
F005483	A11	22	4440 - 3
F005483	A13	22	4440 - 3B
F005494	A11	18	4440 - 3
F005494	A13	10	4440 - 3B
F005494	B6	32	4440 - 15
F005506	A17	22	4440 - 5
F005509	F16	20	4465 - 19
F005551	A11	21	4440 - 3
F005551	A13	11	4440 - 3B
F005551	B6	17	4440 - 15
F005551	C12	33	4460 - 9
F005553	A11	9	4440 - 3
F005553	F16	0	4465 - 19
F005555	A11	10	4440 - 3
F005555	A13	3	4440 - 3B
F005557	C24	8	4460 - 19
F005570	E8	26	4462 - 5
F005570	E10	31	4462 - 7
F005570	E14	43	4462 - 11
F005570	E16	38	4462 - 13
F005571	A17	21	4440 - 5
F005571	A19	7	4440 - 7
F005571	A23	7	4440 - 9B
F005572	A17	34	4440 - 5
F005572	A17	35	4440 - 5
F005572	A19	15	4440 - 7
F005572	A23	15	4440 - 9B
F005596	B8	59	4440 - 17
F005612	E24	3	4465 - 3
F005612	F12	2	4465 - 15
F005613	F16	18	4465 - 19
F005614	F16	19	4465 - 19
F005615	B20	5	4443 - 7
F005615	B22	5	4443 - 9
F005615	B24	5	4443 - 11
F005620	B14	27	4443 - 3
F005620	B16	22	4443 - 5
F005621	B14	26	4443 - 3
F005621	B16	21	4443 - 5
F005625	B20	2	4443 - 7
F005625	B22	2	4443 - 9
F005625	B24	2	4443 - 11
F005626	A11	13	4440 - 3
F005626	B4	15	4440 - 13
F005626	B8	45	4440 - 17
F005635	A11	14	4440 - 3
F005635	A13	14	4440 - 3B
F007290	B6	24	4440 - 15
F007291	B6	26	4440 - 15
F007292	B6	23	4440 - 15
F007556	F2	19	4465 - 5
F007748	C12	38	4460 - 9
F008262	A19	8	4440 - 7
F008262	A23	8	4440 - 9B
F008262	C12	23	4460 - 9
F008276	A21	65	4440 - 9
F008276	A25	65	4440 - 9D
F008276	B2	15	4440 - 11
F008296	A21	72	4440 - 9
F008296	A25	72	4440 - 9D
F008296	B2	43	4440 - 11
F008352	C10	1	4460 - 7
F008353	C10	3	4460 - 7
F008354	C10	4	4460 - 7
F008355	C10	5	4460 - 7
F008356	C10	8	4460 - 7
F008447	E8	22	4462 - 5
F008448	C16	9	4460 - 13
F008449	C14	8	4460 - 11
F008449	E6	..	4462 - 3
F008449	E12	2	4462 - 9
F008452	B20	12	4443 - 7
F008572	A13	20	4440 - 3B
F008572	A17	31	4440 - 5
F008572	A19	19	4440 - 7
F008572	A23	19	4440 - 9B
F008631	C14	15	4460 - 11
F008631	E10	27	4462 - 7
F008631	E14	12	4462 - 11
F008631	E16	12	4462 - 13
F008639	E14	32	4462 - 11
F008639	E16	29	4462 - 13
F008640	E14	10	4462 - 11
F008644	E16	34	4462 - 13
F008644	E18	21	4462 - 15
F008646	A17	33	4440 - 5
F008646	A19	9	4440 - 7
F008646	A23	9	4440 - 9B
F008653	C16	7	4460 - 13
F009831	A17	3	4440 - 5
F009835	A17	5	4440 - 5
F009836	A17	13	4440 - 5
F009836	A19	24	4440 - 7
F009836	A23	24	4440 - 9B
F009839	A17	4	4440 - 5
F009841	A17	2	4440 - 5
F009841	A19	20	4440 - 7
F009841	A23	20	4440 - 9B
F009843	D10	19	4460 - 29
F009843	D20	35	4460 - 37
F009848	A17	15	4440 - 5
F009848	A19	35	4440 - 7
F009848	A23	35	4440 - 9B
F010072	C24	13	4460 - 19
F010079	D2	13	4460 - 21
F010079	D10	14	4460 - 29
F010079	D10	26	4460 - 29
F010079	D20	21	4460 - 37
F010079	D20	29	4460 - 37
F010079	E2	6	4460 - 43
F010079	F16	3	4465 - 19
F010192	A17	42	4440 - 5
F010537	A19	6	4440 - 7
F010537	A23	6	4440 - 9B
F010537	E10	20	4462 - 7
F010668	B20	15	4443 - 7
F010668	B22	6	4443 - 9
F010668	B24	7	4443 - 11
F010685	C10	11	4460 - 7
F010685	E20	11	4462 - 17
F010686	C10	6	4460 - 7
F010687	C10	7	4460 - 7
F010688	C10	9	4460 - 7
F010721	C12	7	4460 - 9
F010741	B4	14	4440 - 13
F010749	A19	32	4440 - 7
F010749	A23	32	4440 - 9B
F010749	B2	17	4440 - 11
F010749	E14	36	4462 - 11
F010749	E16	32	4462 - 13
F010765	A15	10	4440 - 3D
F010828	E8	23	4462 - 5
F010828	E12	8	4462 - 9
F010828	E14	37	4462 - 11
F010828	E16	33	4462 - 13
F010872	B24	6	4443 - 11
F010872	B24	7	4443 - 11
F010919	D10	27	4460 - 29
F010919	D10	28	4460 - 29
F010919	D20	28	4460 - 37
F010919	D20	34	4460 - 37
F010919	E2	12	4460 - 43
F011178	B6	8	4440 - 15
F011178	C4	6	4450 - 3
F011186	B6	20	4440 - 15
F011198	A17	39	4440 - 5
F011198	A21	68	4440 - 9
F011198	A25	68	4440 - 9D
F011198	B6	22	4440 - 15
F011208	A17	7	4440 - 5
F011209	A17	9	4440 - 5
F011217	A17	11	4440 - 5
F011293	E14	41	4462 - 11
F011293	E16	36	4462 - 13
F011344	E18	11	4462 - 15
F011349	E14	4	4462 - 11
F011349	E16	4	4462 - 13
F011349	E18	3	4462 - 15
F011349	E20	4	4462 - 17
F011353	C18	28	4460 - 15
F011353	C22	22	4460 - 17
F011445	B6	19	4440 - 15
F011445	F12	0	4465 - 15
F011446	E24	5	4465 - 3
F011446	F12	6	4465 - 15
F011458	F16	15	4465 - 19
F011459	F16	2	4465 - 19
F011469	F8	3	4465 - 11
F011472	F8	11	4465 - 11
F011483	A11	5	4440 - 3
F011483	A13	4	4440 - 3B
F011485	C18	8	4460 - 15
F011485	D2	20	4460 - 21
F012507	B14	31	4443 - 3
F012520	D2	10	4460 - 21
F012521	D2	28	4460 - 21
F012529	C24	6	4460 - 19
F012547	B16	16	4443 - 5
F012548	B16	16	4443 - 5
F012549	B16	16	4443 - 5
F012550	B16	16	4443 - 5
F012556	B14	32	4443 - 3
F012558	B14	28	4443 - 3
F012558	B16	23	4443 - 5
F012592	C24	9	4460 - 19
F012592	D2	12	4460 - 21
F012623	C12	6	4460 - 9
F012624	C12	45	4460 - 9
F012625	C12	8	4460 - 9
F012645	B4	1	4440 - 13
F012647	B4	3	4440 - 13

NUMERICAL INDEX - CONTINUED

PART NO.	GRID	KEY	PAGE
F012648	B4	4	4440 - 13
F012651	B4	7	4440 - 13
F012683	A11	16	4440 - 3
F012683	A13	19	4440 - 3B
F012697	B6	29	4440 - 15
F012712	A17	36	4440 - 5
F012758	A17	43	4440 - 5
F012758	F14	13	4465 - 17
F012789	D2	18	4460 - 21
F012791	A11	19	4440 - 3
F012791	A13	17	4440 - 3B
F012865	C10	0	4460 - 7
F013014	B20	4	4443 - 7
F013014	B22	4	4443 - 9
F013014	B24	4	4443 - 11
F013167	C12	16	4460 - 9
F013225	A11	24	4440 - 3
F013225	A13	16	4440 - 3B
F013226	A11	20	4440 - 3
F013226	A13	18	4440 - 3B
F013228	A11	7	4440 - 3
F013228	A13	15	4440 - 3B
F013230	A11	3	4440 - 3
F013230	A13	5	4440 - 3B
F013232	A11	1	4440 - 3
F013232	A13	1	4440 - 3B
F013393	B8	40	4440 - 17
F013594	A21	73	4440 - 9
F013594	A25	67	4440 - 9D
F013594	C18	18	4460 - 15
F013594	C22	18	4460 - 17
F013607	A17	29	4440 - 5
F013607	A19	37	4440 - 7
F013607	A23	37	4440 - 9B
F013607	C12	30	4460 - 9
F013607	F2	17	4465 - 5
F013609	C22	12	4460 - 17
F013637	B4	12	4440 - 13
F013637	B14	2	4443 - 3
F013637	B16	19	4443 - 5
F013894	B8	44	4440 - 17
F013895	A17	30	4440 - 5
F013913	A17	25	4440 - 5
F013913	A21	74	4440 - 9
F013913	A25	74	4440 - 9D
F013914	A17	24	4440 - 5
F013914	A19	3	4440 - 7
F013914	A23	3	4440 - 9B
F014081	C12	9	4460 - 9
F014614	A17	14	4440 - 5
F014614	A21	63	4440 - 9
F014614	A25	63	4440 - 9D
F014942	D20	10	4460 - 37
F014998	B14	34	4443 - 3
F014998	B16	0	4443 - 5
F014999	B14	16	4443 - 3
F014999	B16	16	4443 - 5
F015000	B14	15	4443 - 3
F015000	B16	14	4443 - 5
F015001	B14	11	4443 - 3
F015001	B16	7	4443 - 5
F015003	B14	19	4443 - 3
F015003	B16	5	4443 - 5
F015049	B6	13	4440 - 15
F015740	E24	16	4465 - 3
F015955	B8	49	4440 - 17
F015955	F10	16	4465 - 13
F015978	B2	2	4440 - 11
F016303	C14	13	4460 - 11
F016317	E10	37	4462 - 7
F016459	B22	0	4443 - 9
F016496	F16	4	4465 - 19
F017216	A21	55	4440 - 9
F017216	A25	55	4440 - 9D
F017216	B2	27	4440 - 11
F017320	A19	28	4440 - 7
F017320	A23	28	4440 - 9B
F017320	B2	35	4440 - 11
F017320	C24	15	4460 - 19
F017387	B8	56	4440 - 17
F017388	B4	5	4440 - 13
F017389	B8	55	4440 - 17
F017598	D2	34	4460 - 21
F017718	E18	12	4462 - 15
F017736	B6	25	4440 - 15
F017736	F8	0	4465 - 11
F017840	B6	2	4440 - 15
F018020	B22	14	4443 - 9
F018067	C16	8	4460 - 13
F018067	E8	27	4462 - 5
F018067	E10	32	4462 - 7
F018090	D10	17	4460 - 29
F018090	D20	24	4460 - 37
F018091	D10	13	4460 - 29
F018091	D20	20	4460 - 37
F018091	E2	4	4460 - 43
F018111	A21	52	4440 - 9
F018111	A25	52	4440 - 9D
F018111	B2	41	4440 - 11
F018111	C14	11	4460 - 11
F018111	C22	19	4460 - 17
F018111	C24	5	4460 - 19
F018111	D4	5	4460 - 23
F018111	E10	29	4462 - 7
F018111	E14	42	4462 - 11
F018111	E16	37	4462 - 13
F018112	E12	4	4462 - 9
F018768	E6	..	4462 - 3
F018768	E10	16	4462 - 7
F018768	E12	3	4462 - 9
F018768	E14	30	4462 - 11
F018768	E16	27	4462 - 13
F018768	E18	16	4462 - 15
F018771	E6	..	4462 - 3
F018771	E12	6	4462 - 9
F018771	E14	29	4462 - 11
F018771	E16	26	4462 - 13
F018771	E18	17	4462 - 15
F018771	E20	6	4462 - 17
F018772	E6	..	4462 - 3
F018772	E14	31	4462 - 11
F018772	E16	28	4462 - 13
F018773	E18	1	4462 - 15
F018775	E18	9	4462 - 15
F018776	E14	14	4462 - 11
F018776	E16	14	4462 - 13
F018776	E18	14	4462 - 15
F018778	E12	5	4462 - 9
F018779	E20	2	4462 - 17
F018781	E20	5	4462 - 17
F018787	E14	27	4462 - 11
F018787	E16	24	4462 - 13
F018792	E10	8	4462 - 7
F018794	E10	11	4462 - 7
F018795	E10	13	4462 - 7
F018796	E6	..	4462 - 3
F018796	E10	17	4462 - 7
F018801	E14	1	4462 - 11
F018801	E16	1	4462 - 13
F018802	E14	2	4462 - 11
F018802	E16	2	4462 - 13
F018803	E16	3	4462 - 13
F018805	E14	8	4462 - 11
F018805	E16	8	4462 - 13
F018807	E14	23	4462 - 11
F018807	E16	20	4462 - 13
F018807	E16	22	4462 - 13
F018808	E14	25	4462 - 11
F018810	E16	30	4462 - 13
F018811	E14	35	4462 - 11
F018811	E16	31	4462 - 13
F018812	E14	3	4462 - 11
F018813	E14	16	4462 - 11
F018814	E14	18	4462 - 11
F018815	E14	33	4462 - 11
F018824	E14	9	4462 - 11
F018824	E14	11	4462 - 11
F018824	E16	9	4462 - 13
F018824	E16	11	4462 - 13
F018827	E14	22	4462 - 11
F018827	E16	19	4462 - 13
F018836	C16	3	4460 - 13
F018838	B6	30	4440 - 15
F019061	F8	16	4465 - 11
F019062	F8	1	4465 - 11
F019063	F8	2	4465 - 11
F019064	E24	7	4465 - 3
F019065	E24	2	4465 - 3
F019067	E24	9	4465 - 3
F019068	E24	14	4465 - 3
F019069	E24	21	4465 - 3
F019070	E24	8	4465 - 3
F019187	C12	12	4460 - 9
F019245	C12	37	4460 - 9
F019801	A17	10	4440 - 5
F019944	C24	10	4460 - 19
F019944	D2	16	4460 - 21
F019945	C22	15	4460 - 17
F019945	C24	12	4460 - 19
F020022	A21	46	4440 - 9
F020022	A25	46	4440 - 9D
F020022	B2	12	4440 - 11
F020176	A11	25	4440 - 3
F020180	A17	8	4440 - 5
F020181	A17	18	4440 - 5
F020181	A19	14	4440 - 7
F020181	A23	14	4440 - 9B
F020746	A25	76	4440 - 9D
F020746	D6	2	4460 - 25
F020756	C22	6	4460 - 17
F020806	B22	7	4443 - 9
F020810	B22	11	4443 - 9
F020811	B22	12	4443 - 9
F020813	B22	13	4443 - 9
F021246	B4	2	4440 - 13
F021332	C12	3	4460 - 9
F021332	C18	23	4460 - 15
F021333	C12	4	4460 - 9
F021404	A17	12	4440 - 5
F021413	B4	8	4440 - 13
F021413	D20	9	4460 - 37

NUMERICAL INDEX - CONTINUED

PART NO.	GRID	KEY	PAGE
F021485	B8	54	4440 - 17
F021485	B12	7	4440 - 19
F021587	C14	5	4460 - 11
F021587	E8	21	4462 - 5
F021587	E10	26	4462 - 7
F021588	E8	18	4462 - 5
F021599	E10	35	4462 - 7
F021600	E10	38	4462 - 7
F021605	E10	28	4462 - 7
F021605	E14	13	4462 - 11
F021605	E16	13	4462 - 13
F021607	E14	15	4462 - 11
F021607	E16	15	4462 - 13
F021607	E18	15	4462 - 15
F021609	E14	17	4462 - 11
F021609	E14	19	4462 - 11
F021614	E14	24	4462 - 11
F021614	E14	26	4462 - 11
F021614	E16	21	4462 - 13
F021614	E16	23	4462 - 13
F021627	C16	11	4460 - 13
F021653	E6	..	4462 - 3
F021653	E18	13	4462 - 15
F021684	C14	5	4460 - 11
F021685	C14	6	4460 - 11
F021688	E6	..	4462 - 3
F021688	E10	18	4462 - 7
F022057	A21	66	4440 - 9
F022059	B20	13	4443 - 7
F022078	E10	14	4462 - 7
F022136	B14	9	4443 - 3
F022136	B16	8	4443 - 5
F022149	B16	10	4443 - 5
F022163	B2	31	4440 - 11
F022415	D10	5	4460 - 29
F022415	D10	37	4460 - 29
F022415	D10	43	4460 - 29
F022415	D12	4	4460 - 29B
F022415	D20	5	4460 - 37
F022415	D20	15	4460 - 37
F022415	D20	44	4460 - 37
F022415	E4	13	4460 - 45
F022417	A19	30	4440 - 7
F022417	B2	38	4440 - 11
F022417	C12	25	4460 - 9
F022417	C18	16	4460 - 15
F022417	D2	24	4460 - 21
F022484	B6	8	4440 - 15
F022484	C4	6	4450 - 3
F022656	C12	5	4460 - 9
F022721	C6	18	4460 - 3
F023007	D18	15	4460 - 35
F023071	B14	25	4443 - 3
F023071	B16	20	4443 - 5
F023535	C18	17	4460 - 15
F023713	C12	13	4460 - 9
F024301	D18	13	4460 - 35
F024364	A19	29	4440 - 7
F024364	B2	34	4440 - 11
F024364	C24	19	4460 - 19
F024402	C18	12	4460 - 15
F024402	C20	3	4460 - 15B
F024428	A17	44	4440 - 5
F024599	A19	27	4440 - 7
F024599	B2	30	4440 - 11
F024599	C12	39	4460 - 9
F024601	A25	75	4440 - 9D
F024819	E16	10	4462 - 13
F024840	E18	22	4462 - 15
F024875	D6	3	4460 - 25
F025424	D2	14	4460 - 21
F025469	C24	21	4460 - 19
F025632	D10	18	4460 - 29
F025632	D20	23	4460 - 37
F025702	C16	6	4460 - 13
F025711	E14	39	4462 - 11
F025711	E18	23	4462 - 15
F026120	C4	4	4450 - 3
F026206	A21	48	4440 - 9
F026206	A25	48	4440 - 9D
F026206	B2	8	4440 - 11
F026206	F10	19	4465 - 13
F026256	D2	27	4460 - 21
F026258	B14	4	4443 - 3
F026258	B16	17	4443 - 5
F026259	B14	8	4443 - 3
F026259	B16	9	4443 - 5
F026261	B14	14	4443 - 3
F026261	B16	13	4443 - 5
F026262	B14	24	4443 - 3
F026262	B16	12	4443 - 5
F026264	B14	20	4443 - 3
F026264	B16	25	4443 - 5
F026265	B14	13	4443 - 3
F026265	B16	15	4443 - 5
F026266	B14	3	4443 - 3
F026266	B16	18	4443 - 5
F026606	C24	20	4460 - 19
F027231	A23	29	4440 - 9B
F027648	A17	45	4440 - 5
F027699	C22	16	4460 - 17
F028405	E6	4	4462 - 3
F028405	E14	0	4462 - 11
F028407	E6	5	4462 - 3
F028407	E16	0	4462 - 13
F028408	E12	9	4462 - 9
F028789	C14	4	4460 - 11
F028789	E8	12	4462 - 5
F028791	E8	11	4462 - 5
F028802	D10	6	4460 - 29
F028802	D10	32	4460 - 29
F028802	D10	44	4460 - 29
F028802	D12	5	4460 - 29B
F028802	D20	4	4460 - 37
F028802	D20	16	4460 - 37
F028802	D20	45	4460 - 37
F028802	E4	12	4460 - 45
F028803	D10	15	4460 - 29
F028803	D10	25	4460 - 29
F028803	D20	22	4460 - 37
F028803	D20	30	4460 - 37
F028803	E2	7	4460 - 43
F028861	D10	2	4460 - 29
F028861	D10	40	4460 - 29
F028861	D20	12	4460 - 37
F028861	D20	42	4460 - 37
F028861	E4	14	4460 - 45
F029919	B6	10	4440 - 15
F029982	B8	41	4440 - 17
F029982	E24	0	4465 - 3
F030032	C10	0	4460 - 7
F030111	B6	10	4440 - 15
F030750	A21	50	4440 - 9
F030750	A25	50	4440 - 9D
F030750	B2	10	4440 - 11
F030978	B6	14	4440 - 15
F031177	B8	38	4440 - 17
F031184	B8	42	4440 - 17
F031276	C12	42	4460 - 9
F031278	E20	9	4462 - 17
F031713	D10	34	4460 - 29
F031713	D20	6	4460 - 37
F031740	A21	70	4440 - 9
F031740	A25	70	4440 - 9D
F031740	B2	28	4440 - 11
F031744	A25	79	4440 - 9D
F031744	D6	4	4460 - 25
F031950	C16	0	4460 - 13
F032093	E18	20	4462 - 15
F032093	E20	10	4462 - 17
F032110	C22	21	4460 - 17
F032113	D2	33	4460 - 21
F032160	D20	38	4460 - 37
F033049	F2	5	4465 - 5
F033364	E10	10	4462 - 7
F033366	E20	5	4462 - 17
F033631	A17	16	4440 - 5
F033631	A19	21	4440 - 7
F033631	A23	21	4440 - 9B
F033710	A21	71	4440 - 9
F033710	A25	71	4440 - 9D
F033710	B2	42	4440 - 11
F033710	C4	..	4450 - 3
F033862	E24	1	4465 - 3
F034273	B6	3	4440 - 15
F034273	C4	2	4450 - 3
F034274	B6	3	4440 - 15
F034274	C4	2	4450 - 3
F034551	A19	42	4440 - 7
F034551	A23	42	4440 - 9B
F034551	B2	18	4440 - 11
F034552	A21	49	4440 - 9
F034552	A25	49	4440 - 9D
F034552	B2	9	4440 - 11
F034553	A21	47	4440 - 9
F034553	A25	47	4440 - 9D
F034553	B2	6	4440 - 11
F034554	A19	38	4440 - 7
F034554	A23	38	4440 - 9B
F034554	B2	19	4440 - 11
F034555	A23	40	4440 - 9B
F034556	A19	40	4440 - 7
F034556	B2	21	4440 - 11
F034557	A23	41	4440 - 9B
F034558	A21	51	4440 - 9
F034558	A25	51	4440 - 9D
F034558	B2	11	4440 - 11
F034559	A21	54	4440 - 9
F034559	A25	54	4440 - 9D
F034559	B2	22	4440 - 11
F034560	A25	78	4440 - 9D
F034653	F16	1	4465 - 19
F034668	F12	1	4465 - 15
F034742	B6	8	4440 - 15
F034836	C10	10	4460 - 7
F035010	C6	1	4460 - 3
F035011	C6	2	4460 - 3
F035012	C6	5	4460 - 3
F035014	C6	9	4460 - 3
F035015	C6	10	4460 - 3
F035017	A19	16	4440 - 7

NUMERICAL INDEX - CONTINUED

PART NO.	GRID	KEY	PAGE
F035017	C6	12	4460 - 3
F035018	C6	13	4460 - 3
F035019	C6	14	4460 - 3
F035020	C6	15	4460 - 3
F035021	C6	16	4460 - 3
F035022	C6	17	4460 - 3
F035024	C6	19	4460 - 3
F035025	C6	20	4460 - 3
F035026	C6	23	4460 - 3
F035027	C6	24	4460 - 3
F035028	C6	24	4460 - 3
F035029	C6	24	4460 - 3
F035030	C6	24	4460 - 3
F035031	C6	24	4460 - 3
F035032	C6	24	4460 - 3
F035033	C6	24	4460 - 3
F035038	D18	5	4460 - 35
F035038	D18	9	4460 - 35
F035038	D22	2	4460 - 39
F035038	D24	3	4460 - 41
F035053	E8	8	4462 - 5
F035190	F16	11	4465 - 19
F035193	F12	11	4465 - 15
F035195	F16	7	4465 - 19
F035344	F18	11	4465 - 21
F035434	C16	2	4460 - 13
F035505	D22	6	4460 - 39
F035505	D24	2	4460 - 41
F035590	D10	29	4460 - 29
F035590	D20	31	4460 - 37
F035765	E18	2	4462 - 15
F035766	E18	6	4462 - 15
F035766	E20	3	4462 - 17
F036512	B12	5	4440 - 19
F038415	A19	33	4440 - 7
F038415	A23	33	4440 - 9B
F038415	B2	16	4440 - 11
F038416	A21	43	4440 - 9
F038416	A25	43	4440 - 9D
F038416	B2	14	4440 - 11
F038417	A21	44	4440 - 9
F038417	A25	44	4440 - 9D
F038417	B2	7	4440 - 11
F038418	A21	45	4440 - 9
F038418	A25	45	4440 - 9D
F038418	B2	13	4440 - 11
F038426	A19	34	4440 - 7
F038426	A23	34	4440 - 9B
F038426	B2	4	4440 - 11
F038427	B2	3	4440 - 11
F038495	E8	4	4462 - 5
F038710	E14	34	4462 - 11
F038815	A25	81	4440 - 9D
F038819	D18	17	4460 - 35
F038853	B14	1	4443 - 3
F039180	E8	17	4462 - 5
F039180	E18	7	4462 - 15
F039180	E20	3	4462 - 17
F039571	B8	52	4440 - 17
F039573	B8	57	4440 - 17
F039574	B8	58	4440 - 17
F039611	B6	12	4440 - 15
F040066	E8	14	4462 - 5
F040644	C4	3	4450 - 3
F040644	C18	26	4460 - 15
F040655	D18	14	4460 - 35
F040934	D16	5	4460 - 33
F041006	D16	10	4460 - 33
F041181	B8	60	4440 - 17
F041181	C4	5	4450 - 3
F041182	B8	61	4440 - 17
F041182	C4	5	4450 - 3
F041376	D2	26	4460 - 21
F041449	A19	31	4440 - 7
F041449	A23	31	4440 - 9B
F041449	B2	1	4440 - 11
F041496	A23	5	4440 - 9B
F042067	D2	23	4460 - 21
F042086	E8	10	4462 - 5
F043165	C24	28	4460 - 19
F043524	C12	14	4460 - 9
F043550	B2	39	4440 - 11
F043609	E20	1	4462 - 17
F043894	C22	4	4460 - 17
F043895	C22	3	4460 - 17
F044080	B12	3	4440 - 19
F044399	D4	1	4460 - 23
F044399	D6	5	4460 - 25
F044886	B14	30	4443 - 3
F045000	F4	12	4465 - 7
F045029	F4	10	4465 - 7
F045157	B8	39	4440 - 17
F045206	C12	32	4460 - 9
F045493	B12	4	4440 - 19
F045892	B8	63	4440 - 17
F046013	B6	18	4440 - 15
F046014	B6	21	4440 - 15
F046045	C24	14	4460 - 19
F046098	A19	13	4440 - 7
F046098	A23	13	4440 - 9B
F046322	B6	15	4440 - 15
F046323	A11	11	4440 - 3
F046323	A13	23	4440 - 3B
F046419	E8	20	4462 - 5
F046419	E10	25	4462 - 7
F046432	E8	15	4462 - 5
F046505	C16	10	4460 - 13
F046538	C12	2	4460 - 9
F046606	A19	17	4440 - 7
F046718	D2	25	4460 - 21
F046726	C24	3	4460 - 19
F046728	D2	7	4460 - 21
F046729	D2	5	4460 - 21
F046748	D18	12	4460 - 35
F046793	A19	25	4440 - 7
F046801	B2	40	4440 - 11
F046801	C12	15	4460 - 9
F046811	E18	9	4462 - 15
F046878	B6	1	4440 - 15
F046971	B6	0	4440 - 15
F047314	C24	18	4460 - 19
F047315	A21	56	4440 - 9
F047315	A25	56	4440 - 9D
F047315	B2	23	4440 - 11
F047316	A21	57	4440 - 9
F047316	A25	57	4440 - 9D
F047316	B2	24	4440 - 11
F047317	A21	58	4440 - 9
F047317	A25	58	4440 - 9D
F047317	B2	25	4440 - 11
F047318	A21	59	4440 - 9
F047318	A25	59	4440 - 9D
F047318	B2	26	4440 - 11
F047320	A21	60	4440 - 9
F047320	B2	37	4440 - 11
F047323	A21	75	4440 - 9
F047323	A25	80	4440 - 9D
F047323	B2	44	4440 - 11
F047626	E6	3	4462 - 3
F047626	E12	10	4462 - 9
F047850	E8	6	4462 - 5
F047910	C16	1	4460 - 13
F047912	C16	2	4460 - 13
F047913	C16	5	4460 - 13
F048064	A17	1	4440 - 5
F048064	A19	4	4440 - 7
F048064	A23	4	4440 - 9B
F048101	B6	2	4440 - 15
F048116	A19	0	4440 - 7
F048116	B6	4	4440 - 15
F048122	C22	9	4460 - 17
F048128	C18	25	4460 - 15
F048147	B8	50	4440 - 17
F048177	A23	0	4440 - 9B
F048177	B6	4	4440 - 15
F048194	C12	1	4460 - 9
F048327	E16	16	4462 - 13
F048331	B6	5	4440 - 15
F048335	E12	1	4462 - 9
F048339	E10	9	4462 - 7
F048340	E10	7	4462 - 7
F048342	E10	1	4462 - 7
F048346	E8	2	4462 - 5
F048347	E8	1	4462 - 5
F048437	C14	4	4460 - 11
F048971	E18	10	4462 - 15
F048973	E20	0	4462 - 17
F048981	D2	8	4460 - 21
F048985	C24	1	4460 - 19
F048990	C24	4	4460 - 19
F048992	E10	6	4462 - 7
F048993	E10	5	4462 - 7
F048994	E10	4	4462 - 7
F049007	D10	24	4460 - 29
F049007	D20	26	4460 - 37
F049007	E2	10	4460 - 43
F049008	D10	23	4460 - 29
F049008	D20	27	4460 - 37
F049008	E2	11	4460 - 43
F049009	D10	10	4460 - 29
F049009	D20	18	4460 - 37
F049009	E2	5	4460 - 43
F049013	B2	29	4440 - 11
F049020	C18	3	4460 - 15
F049021	C18	6	4460 - 15
F049025	C8	1	4460 - 5
F049028	C8	4	4460 - 5
F049032	C8	8	4460 - 5
F049035	C8	11	4460 - 5
F049037	C8	13	4460 - 5
F049038	C8	14	4460 - 5
F049039	C8	15	4460 - 5
F049040	C8	16	4460 - 5
F049042	C8	18	4460 - 5
F049043	C8	19	4460 - 5
F049044	C8	20	4460 - 5
F049045	C8	21	4460 - 5
F049046	C8	22	4460 - 5
F049047	C8	23	4460 - 5
F049048	C8	24	4460 - 5
F049049	C8	25	4460 - 5

NUMERICAL INDEX - CONTINUED

PART NO.	GRID	KEY	PAGE
F049050	C8	26	4460 - 5
F049051	C8	27	4460 - 5
F049052	C8	28	4460 - 5
F049053	B8	65	4440 - 17
F049053	C4	7	4450 - 3
F049094	A19	22	4440 - 7
F049133	C22	20	4460 - 17
F049138	B8	47	4440 - 17
F049249	A11	0	4440 - 3
F049249	B6	9	4440 - 15
F049291	B6	2	4440 - 15
F049312	A11	2	4440 - 3
F049324	B6	8	4440 - 15
F049327	E6	1	4462 - 3
F049327	E8	0	4462 - 5
F049328	E6	2	4462 - 3
F049328	E10	0	4462 - 7
F050224	D4	6	4460 - 23
F050480	B6	2	4440 - 15
F050528	A11	4	4440 - 3
F050528	A13	2	4440 - 3B
F051120	A17	20	4440 - 5
F051120	A21	61	4440 - 9
F051120	F4	0	4465 - 7
F051121	A23	30	4440 - 9B
F052410	D4	0	4460 - 23
F052417	D4	2	4460 - 23
F052499	C24	27	4460 - 19
F052530	C18	21	4460 - 15
F052693	D8	10	4460 - 27
F052872	B20	8	4443 - 7
F052872	B22	8	4443 - 9
F053271	D22	4	4460 - 39
F053303	D18	6	4460 - 35
F053303	D18	10	4460 - 35
F053303	D20	2	4460 - 37
F053303	D20	46	4460 - 37
F053303	D22	3	4460 - 39
F053303	D24	5	4460 - 41
F053303	E2	14	4460 - 43
F053303	E4	19	4460 - 45
F053324	D20	1	4460 - 37
F053324	E2	1	4460 - 43
F053342	D4	7	4460 - 23
F053347	A19	36	4440 - 7
F053347	A23	36	4440 - 9B
F053688	D8	7	4460 - 27
F053689	D8	9	4460 - 27
F053697	A25	77	4440 - 9D
F054218	E6	6	4462 - 3
F054218	E18	0	4462 - 15
F054272	B14	7	4443 - 3
F054273	B14	10	4443 - 3
F054273	B16	6	4443 - 5
F054274	B14	12	4443 - 3
F054275	B14	0	4443 - 3
F054276	B14	5	4443 - 3
F054276	B16	27	4443 - 5
F054277	B14	6	4443 - 3
F054277	B16	28	4443 - 5
F054279	B14	22	4443 - 3
F054280	B14	23	4443 - 3
F054301	D20	3	4460 - 37
F054371	C20	1	4460 - 15B
F054478	E10	34	4462 - 7
F054598	D2	22	4460 - 21
F054628	E8	16	4462 - 5
F054657	E14	5	4462 - 11
F054657	E16	5	4462 - 13
F054657	E18	4	4462 - 15
F054660	E6	0	4462 - 3
F054696	D2	9	4460 - 21
F054697	D2	6	4460 - 21
F054703	F4	16	4465 - 7
F054704	F4	6	4465 - 7
F054706	F4	3	4465 - 7
F054707	F4	5	4465 - 7
F054844	B20	9	4443 - 7
F054844	B22	10	4443 - 9
F054940	D18	8	4460 - 35
F054940	D24	1	4460 - 41
F054941	D18	3	4460 - 35
F054941	D22	1	4460 - 39
F054957	E8	19	4462 - 5
F055043	E14	44	4462 - 11
F055043	E16	39	4462 - 13
F055043	E18	24	4462 - 15
F055044	D14	4	4460 - 31
F055044	D16	3	4460 - 33
F055139	D8	8	4460 - 27
F055155	E8	29	4462 - 5
F055284	C12	21	4460 - 9
F055284	D8	5	4460 - 27
F055285	C12	20	4460 - 9
F055285	D8	2	4460 - 27
F055286	D8	6	4460 - 27
F055290	C12	19	4460 - 9
F055290	D8	3	4460 - 27
F055290	D10	7	4460 - 29
F055290	D10	11	4460 - 29
F055290	D10	22	4460 - 29
F055290	D10	33	4460 - 29
F055290	D12	6	4460 - 29B
F055829	C4	1	4450 - 3
F055829	C8	0	4460 - 5
F055927	A15	7	4440 - 3D
F055928	D12	1	4460 - 29B
F055928	E4	18	4460 - 45
F055929	A15	6	4440 - 3D
F056141	C8	5	4460 - 5
F056206	E14	20	4462 - 11
F056206	E16	17	4462 - 13
F056373	A19	18	4440 - 7
F056373	A23	18	4440 - 9B
F056380	C12	31	4460 - 9
F056381	E8	28	4462 - 5
F056528	E10	3	4462 - 7
F056541	D18	1	4460 - 35
F056643	E14	44	4462 - 11
F056643	E16	39	4462 - 13
F056643	E18	24	4462 - 15
F056832	C4	1	4450 - 3
F056832	C8	0	4460 - 5
F056840	C8	7	4460 - 5
F056841	C8	9	4460 - 5
F056843	C8	17	4460 - 5
F056918	C8	5	4460 - 5
F056957	C18	2	4460 - 15
F057306	D8	4	4460 - 27
F057690	D18	4	4460 - 35
F057704	B16	0	4443 - 5
F057716	C14	14	4460 - 11
F057716	E10	33	4462 - 7
F057716	E22	3	4462 - 19
F057831	C6	2	4460 - 3
F057843	C14	12	4460 - 11
F057849	C18	4	4460 - 15
F057850	C18	5	4460 - 15
F058047	E10	2	4462 - 7
F058177	D20	39	4460 - 37
F058197	D20	37	4460 - 37
F058197	E2	8	4460 - 43
F058740	B20	7	4443 - 7
F058740	B22	15	4443 - 9
F058741	B20	11	4443 - 7
F058743	B20	18	4443 - 7
F058743	B22	16	4443 - 9
F058746	B20	10	4443 - 7
F058747	B20	14	4443 - 7
F058749	B20	17	4443 - 7
F058749	B22	17	4443 - 9
F058750	B24	0	4443 - 11
F058751	B24	0	4443 - 11
F058756	B20	0	4443 - 7
F058757	B20	1	4443 - 7
F058758	B20	6	4443 - 7
F058759	B20	16	4443 - 7
F058759	B22	18	4443 - 9
F058999	C20	2	4460 - 15B
F059094	C24	2	4460 - 19
F059611	E10	21	4462 - 7
F059842	E10	21	4462 - 7
F059996	C14	7	4460 - 11
F060137	E10	11	4462 - 7
F060206	E10	39	4462 - 7
F060264	B14	33	4443 - 3
F060264	B16	11	4443 - 5
F060358	E10	22	4462 - 7
F060359	E10	36	4462 - 7
F060369	A11	8	4440 - 3
F060433	D10	3	4460 - 29
F060756	C14	1	4460 - 11
F060758	C14	9	4460 - 11
F060759	C14	10	4460 - 11
F061290	E8	29	4462 - 5
F061335	C14	2	4460 - 11
F061407	E22	0	4462 - 19
F061482	C14	0	4460 - 11
F061533	D10	41	4460 - 29
F061533	D20	41	4460 - 37
F061533	E4	16	4460 - 45
F061761	A17	16	4440 - 5
F061761	A19	21	4440 - 7
F061761	A23	21	4440 - 9B
F061763	A17	16	4440 - 5
F061763	A19	21	4440 - 7
F061763	A23	21	4440 - 9B
F062020	A21	45	4440 - 9
F062020	A25	45	4440 - 9D
F062020	B2	13	4440 - 11
F062022	C14	3	4460 - 11
F062194	B6	19	4440 - 15
F062194	F14	0	4465 - 17
F062195	B6	25	4440 - 15
F062195	F10	0	4465 - 13
F062196	B8	41	4440 - 17
F062196	F2	0	4465 - 5
F062197	A11	9	4440 - 3
F062197	A13	8	4440 - 3B
F062197	F18	0	4465 - 21
F062198	A17	20	4440 - 5

NUMERICAL INDEX - CONTINUED

PART NO.	GRID	KEY	PAGE
F062198	A21	61	4440 - 9
F062198	A25	61	4440 - 9D
F062198	F6	1	4465 - 9
F062482	E22	4	4462 - 19
F062483	E22	2	4462 - 19
F062484	E22	1	4462 - 19
F062656	A21	44	4440 - 9
F062656	A25	44	4440 - 9D
F062656	B2	7	4440 - 11
F062739	E8	3	4462 - 5
F062740	E8	7	4462 - 5
F063020	F18	12	4465 - 21
F063021	F2	20	4465 - 5
F063022	F14	14	4465 - 17
F063023	F10	21	4465 - 13
F063263	C4	6	4450 - 3
F063264	C4	6	4450 - 3
F063265	C4	6	4450 - 3
F063266	C4	6	4450 - 3
F063426	B16	1	4443 - 5
F063427	B16	2	4443 - 5
F063428	B16	3	4443 - 5
F063429	B16	4	4443 - 5
F063430	B16	26	4443 - 5
F063643	E10	23	4462 - 7
F064019	A17	17	4440 - 5
F064019	A19	22	4440 - 7
F064019	A23	22	4440 - 9B
F064023	A17	17	4440 - 5
F064023	A23	22	4440 - 9B
F064045	F6	9	4465 - 9
F064155	F14	3	4465 - 17
F064156	F14	4	4465 - 17
F064179	F6	5	4465 - 9
F064180	F6	4	4465 - 9
F064181	F6	3	4465 - 9
F064182	F6	2	4465 - 9
F064287	F18	4	4465 - 21
F064318	F10	3	4465 - 13
F064460	F14	1	4465 - 17
F064461	F14	2	4465 - 17
F064462	F10	1	4465 - 13
F064463	F10	2	4465 - 13
F064464	F10	4	4465 - 13
F064465	F10	18	4465 - 13
F064466	F2	1	4465 - 5
F064467	F2	2	4465 - 5
F064468	F2	3	4465 - 5
F064469	F2	4	4465 - 5
F064470	F2	15	4465 - 5
F064471	F18	1	4465 - 21
F064472	F18	2	4465 - 21
F064473	F18	3	4465 - 21
F064474	F6	10	4465 - 9
F064852	E6	..	4462 - 3
F065007	C22	1	4460 - 17
F065008	C22	23	4460 - 17
F065009	C22	2	4460 - 17
F065010	D2	4	4460 - 21
F065011	D2	3	4460 - 21
F065012	D2	1	4460 - 21
F065013	D2	2	4460 - 21
F065014	C18	1	4460 - 15
F065015	C18	29	4460 - 15
F065016	C22	1	4460 - 17
F065017	C22	23	4460 - 17
F065018	D2	1	4460 - 21
F065019	C18	1	4460 - 15
F065380	E8	5	4462 - 5
F065380	E8	9	4462 - 5
F065971	C14	16	4460 - 11
F066799	A19	1	4440 - 7
F066799	A23	1	4440 - 9B
F066799	C6	0	4460 - 3
F066990	C20	5	4460 - 15B
F067033	B4	8	4440 - 13
F067033	D20	9	4460 - 37
F067347	A15	15	4440 - 3D
F067349	A13	25	4440 - 3B
F069118	C4	10	4450 - 3
F069121	C4	9	4450 - 3
F069237	E10	..	4462 - 7
F069238	E18	..	4462 - 15
F069239	E14	..	4462 - 11
F069239	E16	..	4462 - 13
F069240	E8	..	4462 - 5
F069241	E12	..	4462 - 9
F120271	C2	1	4443 - 13
F600299	B6	35	4440 - 15
F600303	D16	1	4460 - 33
F600351	A17	27	4440 - 5
F600351	A19	12	4440 - 7
F600351	A23	12	4440 - 9B
F600380	A21	53	4440 - 9
F600380	A25	53	4440 - 9D
F600624	B8	43	4440 - 17
F600657	A17	6	4440 - 5
F600853	C24	22	4460 - 19
F600856	D14	8	4460 - 31
F600856	D16	6	4460 - 33
F600881	D14	5	4460 - 31
F601173	A15	2	4440 - 3D
F601183	A15	3	4440 - 3D
F601209	A15	4	4440 - 3D
F601288	A15	1	4440 - 3D
F601460	A15	0	4440 - 3D
F601530	B8	68	4440 - 17
F601847	B8	39	4440 - 17
F601858	B2	0	4440 - 11
F601898	A15	5	4440 - 3D
F601992	C12	10	4460 - 9
F602359	B6	7	4440 - 15
F602362	B6	7	4440 - 15
F602510	C24	25	4460 - 19
F603726	D16	2	4460 - 33
F603824	D18	2	4460 - 35
F603827	D18	7	4460 - 35
F603829	E4	2	4460 - 45
F603830	D20	11	4460 - 37
F603831	D20	17	4460 - 37
F603833	D20	25	4460 - 37
F603863	D18	11A	4460 - 35
F604190	C12	28	4460 - 9
F604191	C12	29	4460 - 9
F604241	D10	9	4460 - 29
F604260	D10	21	4460 - 29
F604359	D12	0	4460 - 29B
F604393	C12	11	4460 - 9
F604448	B6	2	4440 - 15
F604449	B6	2	4440 - 15
F604458	D8	15	4460 - 27
F604479	C12	18	4460 - 9
F604480	D8	25	4460 - 27
F604481	C12	17	4460 - 9
F604482	D8	24	4460 - 27
F604483	D8	22	4460 - 27
F604484	D8	21	4460 - 27
F604485	D8	20	4460 - 27
F604486	D8	18	4460 - 27
F604487	D8	17	4460 - 27
F604488	D8	16	4460 - 27
F611519	B8	51	4440 - 17
F611781	D14	1	4460 - 31
F612852	B6	36	4440 - 15
F612933	E2	13	4460 - 43
F613629	B12	2	4440 - 19
F615477	B12	1	4440 - 19
F616155	D8	23	4460 - 27
F616802	D8	11	4460 - 27
F616964	B8	46	4440 - 17
F617310	A13	12	4440 - 3B
F617312	D10	1	4460 - 29
F617354	A13	0	4440 - 3B
F617355	A13	12	4440 - 3B
F617356	A13	7	4440 - 3B
F617796	B6	35	4440 - 15
F618162	B8	43	4440 - 17
F620347	D20	40	4460 - 37
F620348	D10	45	4460 - 29
F623562	D18	11B	4460 - 35
F623562	D24	4	4460 - 41
F626692	B6	6	4440 - 15
F626692	D8	1	4460 - 27
F628260	B10	1	4440 - 17B
F630922	E4	4	4460 - 45
F631015	D24	0	4460 - 41
F631016	D22	0	4460 - 39
F631018	E2	2	4460 - 43
F631019	E2	3	4460 - 43
F631020	E4	3	4460 - 45
F631952	D6	0	4460 - 25
12M7002	D16	11	4460 - 33
14M7237	B8	66	4440 - 17
14M7237	C4	8	4450 - 3
19M8674	E22	6	4462 - 19
19M9337	B10	2	4440 - 17B
19M9470	A15	13	4440 - 3D
19M9588	C4	12	4450 - 3
19M9647	A15	11	4440 - 3D
19M9719	A15	12	4440 - 3D
34M7159	F2	18	4465 - 5
43M5924	D14	2	4460 - 31
51M4236	D2	31	4460 - 21
58M7013	A13	6	4440 - 3B

Equivalence between Specma-hose codes and Hi-Flex-hose codes

Hose type		Standard / description
Specma	**Hi-Flex**	
R1T	/78/	SAE 100 R1T
722	/98/	SAE 100 R2T
R9R	/123L /	SAE 100 R9R/Powertrack
833/733	/33/	Superforest
811	/77/	Slimline
821	/84/	Slimline
855/755	*) /420/	Powertrack
744	/121/	SAE 100 R12
350	/3130/	SAE 100 R8 /SAE 100 R7
R1AT	/77/	SAE 100 R1AT
821	/84/	DIN-EN-857 type 2C
823 Harc	/84H/	Over DIN 20022

*) No durability with Bio-oil (Hi-Flex)

Specma Hose Assy

Example:

833-12 / 1150 / P49-08-14 / P49-08-14 / 200

Hose type Length 1. Fitting 2. Fitting Displacement angle

Hi-Flex Hose Assy

Example:

5655-10-08 / 33 / 5655-10-08 / 200 L= 1150

1. Fitting Hose type 2. Fitting Displacement angle Length

Specma Fitting Connection

Example:

Fitting type Hose size Thread size of fitting head

P84 - 08 - 14

Hi-Flex Fitting Connection

Example:

Fitting type Thread size of fitting head Hose size

5205 - 10 - 08

Hydraulic hose list

PART NO.	PART NAME	SPECMA	HI-FLEX
F023713	HYDRAULIC HOSE - FABRICAT	350-02/1050/P84-02-07/P84-02-07	
F028861	HYDRAULIC HOSE - FABRICAT	R1T-06/480/P34-06-09/P49-06-09	
F031713	HYDRAULIC HOSE - FABRICAT	R1T-06/370/P34-06-09/P84-06-09	
F041496	HYDRAULIC HOSE - FABRICAT	821-04/700/P84-04-09/P84-04-09	
F043524	HYDRAULIC HOSE - FABRICAT	821-06/880/P84-06-09/P84-06-09	5205-06/84/5205-06 L= 880
F043550	HYDRAULIC HOSE - FABRICAT	821-04/750/P49-04-09/P84-04-09	
F043894	HYDRAULIC HOSE - FABRICAT	821-04/1850/P81-04-06/P84-04-09	
F043895	HYDRAULIC HOSE - FABRICAT	821-04/1500/P81-04-06/P84-04-09	
F044399	HYDRAULIC HOSE - FABRICAT	821-04/2500/P49-04-09/P84-04-09	
F046606	HYDRAULIC HOSE - FABRICAT	821-04/600/P49-04-09/P84-04-09	
F046726	HYDRAULIC HOSE - FABRICAT	821-06/450/P84-06-12/P84-06-12	5205-08-06/84/5205-08-06 L= 450
F046728	HYDRAULIC HOSE - FABRICAT	821-04/375/P81-04/P84-04-09	
F046729	HYDRAULIC HOSE - FABRICAT	821-08/1325/P50-08-12/P84-08-12	
F046793	HYDRAULIC HOSE - FABRICAT	821-04/300/P84-04-09/P84-04-09	
F046801	HYDRAULIC HOSE - FABRICAT	821-04/1075/P49-04-09/P84-04-09	
F048981	HYDRAULIC HOSE - FABRICAT	821-08/900/P49-08-12/P84-08-12	
F048985	HYDRAULIC HOSE - FABRICAT	821-06/250/P84-06-12/P84-06-12	5205-08-06/84/5205-08-06 L= 250
F048990	HYDRAULIC HOSE - FABRICAT	821-06/1075/P84-06-12/P84-06-12	5205-08-06/84/5205-08-06 L=1075
F049008	HYDRAULIC HOSE - FABRICAT	811-08/1350/P34-08-12/P49-08-12	
F049009	HYDRAULIC HOSE - FABRICAT	811-08/1450/P34-08-12/P49-08-12	
F049013	HYDRAULIC HOSE - FABRICAT	821-04/1050/P84-04-09/P84-04-09	
F049020	HYDRAULIC HOSE - FABRICAT	821-04/725/P84-04-09/P84-04-09	
F049021	HYDRAULIC HOSE - FABRICAT	821-04/1375/P84-04-09/P84-04-09	
F051121	HYDRAULIC HOSE	821-04/1300/P49-04-09/P84-04-09	
F053697	HYDRAULIC HOSE	821-04/510/P50-04-09/P84-04-09	
F054696	HYDRAULIC HOSE - FABRICAT	821-08/1120/P84-08-12/P84-08-12	
F054697	HYDRAULIC HOSE - FABRICAT	821-04/450/P81-04/P84-04-09	
F056373	HYDRAULIC HOSE - FABRICAT	821-04/1810/P84-04-09/P84-04-09	
F056957	HYDRAULIC HOSE - FABRICAT	821-08/1375/P50-08-12/P84-08-12	
F057849	HYDRAULIC HOSE	821-06/1375/P84-06-09/P84-06-09	5205-06/84/5205-06 L=1375
F057850	HYDRAULIC HOSE	821-06/1575/P84-06-09/P84-06-09	5205-06/84/5205-06 L=1575
F059094	HYDRAULIC HOSE - FABRICAT	821-06/1400/P50-06-12/P84-06-12	5205-08-06/84/5264-08-06 L=1400
F065007	HYDRAULIC HOSE - FABRICAT	755-12HC/1200/IL49-12-21/IL84-12-21	
F065008	HYDRAULIC HOSE - FABRICAT	833-12HC/1200/P49-12-21/P84-12-21	
F065009	HYDRAULIC HOSE - FABRICAT	833-12HC/1200/P49-12-17/P84-12-17	
F065010	HYDRAULIC HOSE - FABRICAT	755-12HC/1200/IL49-12-17/IL84-12-21	
F065011	HYDRAULIC HOSE - FABRICAT	755-12HC/1150/IL50-12-17/IL84-12-21	
F065012	HYDRAULIC HOSE - FABRICAT	755-12HC/950/IL49-12-17/IL84-12-21	
F065013	HYDRAULIC HOSE - FABRICAT	755-12HC/1175/IL49-12-17/IL84-12-21	
F065014	HYDRAULIC HOSE - FABRICAT	755-12HC/1225/IL50-12-17/IL84-12-21	
F065015	HYDRAULIC HOSE - FABRICAT	833-12HC/1225/P50-12-17/P84-12-17	
F065016	HYDRAULIC HOSE - FABRICAT	755-16HC/1200/IL49-16-21/IL84-16-21	
F065017	HYDRAULIC HOSE - FABRICAT	833-16HC/1200/P49-16-21/P84-16-21	
F065018	HYDRAULIC HOSE - FABRICAT	755-12HC/975/IL49-12-17/IL84-12-21	
F065019	HYDRAULIC HOSE - FABRICAT	755-12HC/1225/IL50-12-17/IL84-12-17	